Mitutoyo

Assembly Type ABSOLUTE Linear Scale

ABS AT1123

User's Manual

- Instructions for use -

Read this User's Manual thoroughly before operating the instrument. After reading, retain it close at hand for future reference.
This English language version of the User's Manual contains the original instructions.

DRIVE-CLiQ

No. 99MBE095B3
Date of publication: July 1, 2021 (1)

Correspondence of product names and model numbers

Product name	Model number
Assembly Type ABSOLUTE Linear Scale	ABS AT1123

Notice regarding this document

- Mitutoyo Corporation assumes no responsibilities for any damage to the instrument, caused by its use not conforming to the procedure described in this User's Manual.
- Upon loan or transfer of this instrument, be sure to attach this User's Manual to the instrument.
- In the event of loss or damage to this manual, immediately contact the agent where you purchased the product or a Mitutoyo sales office.
- Before operation of the instrument, thoroughly read this manual to comprehend its contents.
- Particularly, for full understanding of information, carefully read "Safety Precautions" and "Precautions for Use" at the outset of this manual before using the instrument.
- The contents in this manual are based on the information current as of July, 2021.
- No part or whole of this manual may be transmitted or reproduced by any means without prior written permission of Mitutoyo Corporation.
- The corporation, organization and product names that appear in this manual are their trademarks or registered trademarks.

No. 99MBE095B

CONVENTIONS USED IN THIS MANUAL

Conventions used in Mitutoyo's User's Manual are roughly divided into three types (safety reminders, prohibited and mandatory actions, and referential information and locations). Moreover, these safety symbols include general warnings and specific warnings. Specific warning symbols are provided with concrete pictograms inside of them.

■ Safety reminder conventions and wording warning against potential hazards

General	DANGER	Indicates an immediately hazardous situation which, if not avoided, will result in serious injury or death.
	WARNING	Indicates a potentially hazardous situation which, if not avoided, could result in serious injury or death.
	CAUTION	Indicates a potentially hazardous situation which, if not avoided, may result in minor injury.
	NOTICE	Indicates a potentially hazardous situation which, if not avoided, may result in property damage.
Specific		Alerts the user to a specific hazardous situation that means "Caution, risk of electric shock".

■ Conventions and wording indicating prohibited and mandatory actions

General		Indicates concrete information about prohibited actions.
		Indicates concrete information about mandatory actions.
Specific		Indicates that grounding needs to be implemented.

■ Conventions and wording indicating referential information or referential locations

Tips Indicates referential information such as that for when the operating methods and procedures which are printed in these sentences are to be applied to specific conditions.

Indicates referential locations if there is information that should be referred to in this document or an extraneous manual.

E.g.: For further details on, refer to "1.2 Appellation and Functions of Each Part" on page 2.

Safety Precautions

Observe the following descriptions to make full use of the performance of this product:

⚠CAUTION

- Read this User's Manual thoroughly before operating the instrument.
- Before connecting this product to the main unit of the system, make sure that the power for the control unit is turned off.
- To maintain the shielding effect, tighten firmly the screws of the connectors of each connecting cable. Also, to prevent defective contacts, do not touch the connecting terminals of the connectors with bare hands.

Electromagnetic Compatibility (EMC)

This product complies with the EMC Directive and the UK Electromagnetic Compatibility Regulations; however, if this receives electromagnetic interference that exceeds these requirements, it will be out of warranty and require appropriate measures.

This product is an industrial product, and is not intended to be used in residential environment. If this product is used in residential environment, this product may cause electromagnetic interference with other instruments. In such a case, it is required to take appropriate measures for preventing such electromagnetic interference.

Required Environment for Installation

■ Vibration

To install this product unit in a machine, select a location where there is as little vibration as possible.

If this product is used for an extended period of time in a location where there is a substantial amount of vibration, the built-in precision parts may be damaged, thereby adversely influencing the performance of this product.

■ Shock, dust, water/oil protection

To protect the scale unit from being directly exposed to machining oil and chips, or from being bumped by a workpiece, etc., prepare a cover that protects the entire scale unit.

■ Ambient temperature and humidity

This product should be operated in an environment where the temperature is between 0°C and 50 °C and where the relative humidity is between 20 and 80 % RH. Do not use this product in a place where sudden changes in temperature or humidity are observed.

Export Control Compliance

This product falls into the Catch-All-Controlled Goods and/or Catch-All-Controlled Technologies (including Programs) under Category 16 of Appended Table 1 of Export Trade Control Order or under Category 16 of Appended Table of Foreign Exchange Control Order, based on Foreign Exchange and Foreign Trade Law of Japan.

If you intend to re-export the product from a country other than Japan, re-selling the product in a country other than Japan, or re-providing the technology (including program), you shall observe the regulations of your country.

Notes on Export to European Countries

When you intend exporting of this product to any of the European countries, it may be required to provide User's Manual(s) in English and Declaration of Conformity in English (in some cases, the official language of the country to be exproted). For detailed information, please contact Mitutoyo in advance.

Disposal of Products outside the European Countries

Please follow the official instruction in each community and country.

Disposal of Old Electrical & Electronic Equipment (Applicable in the European Countries with Separate Collection Systems)

This symbol on the product or on its packaging is based on WEEE Directive (Directive on Waste Electrical and Electronic Equipment), and this symbol indicates that this product shall not be treated as household waste.

To reduce the environmental impact and minimize the volume of landfills, please cooperate in reuse and recycle.

For how to dispose of the product, please contact the agent where you purchased the product or a Mitutoyo sales office.

China RoHS Compliance Information

This product meets China RoHS requirements. See the table below.

产品中有害物质的名称及含量

部件名称	有害物质					
	铅	汞	镉	六价铬	多溴联苯	多溴二苯醚
	(Pb)	(Hg)	(Cd)	(Cr(VI))	(PBB)	(PBDE)
本体	○	○	○	○	○	○
电气设备部分	×	○	○	○	○	○
配件	○	○	○	○	○	○

本表格依据 SJ/T 11364 的规定编制。

○: 表示该有害物质在该部件所有均质材料中的含量均在 GB/T 26572 规定的限量要求以下。

×: 表示该有害物质至少在该部件的某一均质材料中的含量超出 GB/T 26572 规定的限量要求。

环保使用期限标识是根据《电器电子产品有害物质限制使用管理办法》以及《电子电气产品有害物质限制使用标识要求(SJ/T11364—2014)》制定的,适用于中国境内销售的电子电气产品的标识。

电器电子产品只要按照安全及使用说明内容在正常使用情况下,从生产日期算起,在此期限内产品中含有的有毒有害物质不致发生外泄或突变,不致对环境造成严重污染或对其人身、财产造成严重损害。

产品使用后,要废弃在环保使用年限内或者刚到年限的产品,请根据国家标准采取适当的方法进行处置。

另外,此期限不同于质量/功能的保证期限。

Warranty

This product has been manufactured under strict quality management, but should it develop problems within one year of the date of purchase in normal use, repair shall be performed free of charge. Please contact the agent where you purchased the product or a Mitutoyo sales office ("SERVICE NETWORK" on page App-1). This warranty, however, shall not affect any provisions of the Mitutoyo Software End User License Agreement.

If this product fails or is damaged for any of the following reasons, it will be subject to a repair charge, even if it is still under warranty.

- Failure or damage owing to fair wear and tear
- Failure or damage owing to inappropriate handling, maintenance or repair, or to unauthorized modification
- Failure or damage owing to transport, dropping, or relocation of the instrument after purchase
- Failure or damage owing to fire, salt, gas, abnormal voltage, lightning surge, or natural disaster
- Failure or damage owing to use in combination with hardware or software other than those designated or permitted by Mitutoyo
- Failure or damage owing to use in ultra-hazardous activities

This warranty is effective only where the instrument is properly installed and operated in conformance with the instructions in this manual within the original country of the installation.

EXCEPT AS SPECIFIED IN THIS WARRANTY, ALL EXPRESS OR IMPLIED CONDITIONS, REPRESENTATIONS, AND WARRANTIES OF ANY NATURE WHATSOEVER INCLUDING, WITHOUT LIMITATION, ANY IMPLIED WARRANTY OF MERCHANTABILITY, FITNESS FOR A PARTICULAR PURPOSE, NONINFRINGEMENT OR WARRANTY ARISING FROM A COURSE OF DEALING, USAGE, OR TRADE PRACTICE, ARE HEREBY EXCLUDED TO THE MAXIMUM EXTENT ALLOWED BY APPLICABLE LAW.

You assume all responsibility for all results arising out of its selection of this product to achieve its intended results.

Disclaimer

IN NO EVENT WILL MITUTOYO, ITS AFFILIATED AND RELATED COMPANIES AND SUPPLIERS BE LIABLE FOR ANY LOST REVENUE, PROFIT, OR DATA, OR FOR SPECIAL, DIRECT, INDIRECT, CONSEQUENTIAL, INCIDENTAL, OR PUNITIVE DAMAGES HOWEVER CAUSED AND REGARDLESS OF THE THEORY OF LIABILITY ARISING OUT OF THE USE OF OR INABILITY TO USE THIS PRODUCT EVEN IF MITUTOYO OR ITS AFFILIATED AND RELATED COMPANIES AND/OR SUPPLIERS HAVE BEEN ADVISED OF THE POSSIBILITY OF SUCH DAMAGES.

If, notwithstanding the foregoing, Mitutoyo is found to be liable to you for any damage or loss which arises out of or is in any way connected with use of this product by you, in no event shall Mitutoyo's and/or its affiliated and related companies' and suppliers' liability to you, whether in contract, tort (including negligence), or otherwise, exceed the price paid by you for the product only.

The foregoing limitations shall apply even if the above-stated warranty fails in its essential purpose.

BECAUSE SOME COUNTRIES, STATES OR JURISDICTIONS DO NOT ALLOW THE EXCLUSION OR THE LIMITATION OF LIABILITY FOR CONSEQUENTIAL OR INCIDENTAL DAMAGES, IN SUCH COUNTRIES, STATES OR JURISDICTIONS, MITUTOYO'S LIABILITY SHALL BE LIMITED TO THE EXTENT PERMITTED BY LAW.

Contents

1 Outline

This chapter describes the features of this product, appellations and functions of each part, and the flow of the main tasks to use this product.

1.1 Features

The linear scale will output a moving amount and displacement as digital amounts based on a linear scale graduated in certain fixed pitches.

This can precisely measure moving amounts of various instruments including electronic/semiconductor manufacturing units and machine tools.

This product is an absolute linear scale which utilizes superior electromagnetic induction resistance to the environment.

This product measures all position coordinates from the fixed origin regardless of coordinates measured just before the measurement.

Also, this product does not require an origin return step at the starting time of work or during a power failure, and does not require batteries for backup, which will contribute much labor saving.

Moreover, this product has excellent dustproof/waterproof performance, which makes it possible for you to use this product in harsh environments where chips or cutting oil occur.

We provide more than one type of product with different appearances or sizes depending on the effective length.

1.2 Appellation and Functions of Each Part

We call this product the "scale unit" generically. The scale unit is composed of the scale main unit and the detector head.

The following is the explanation as to appellation and functions of each part.

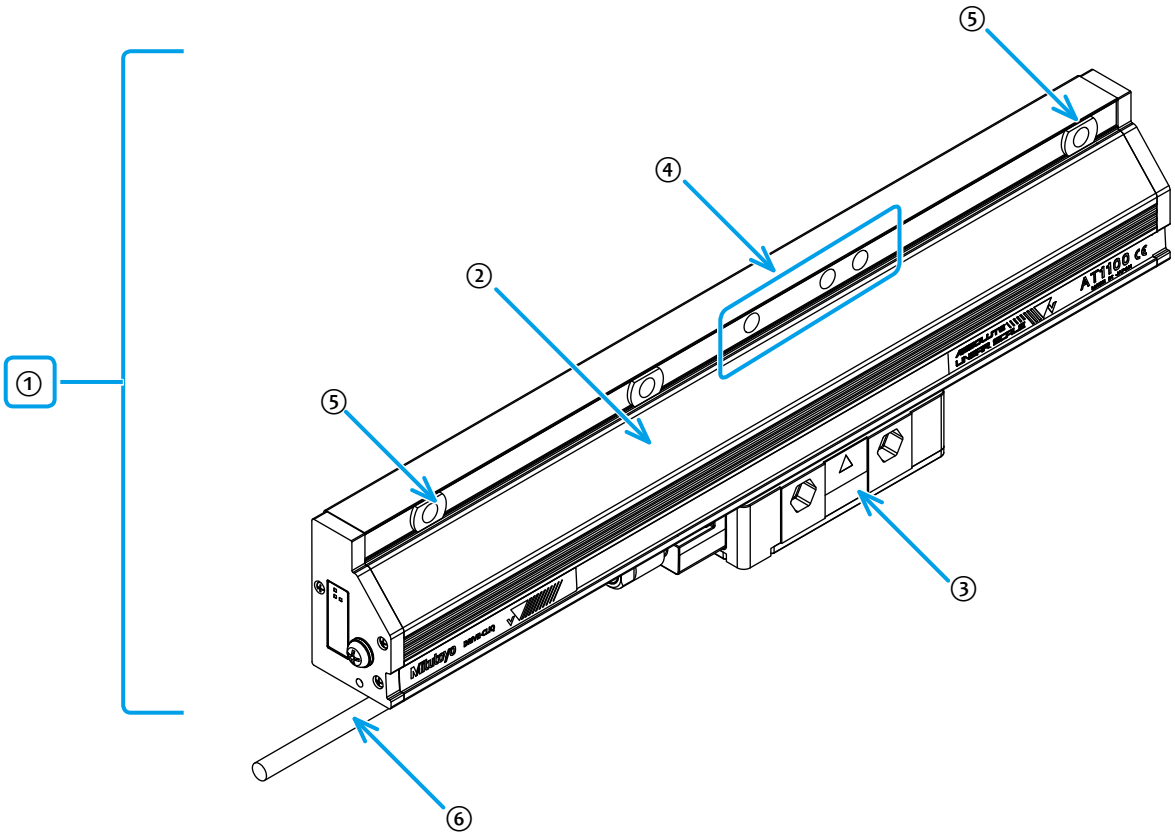

①	Scale unit	The generic appellation of this product. Indicates the state that the detector head has been mounted on the scale main unit.
②	Scale main unit	Represents the linear scale's main unit.
③	Detector head	The part to detect a measurement point.
④	Full-fixing part	The datum position for length variation due to changes in temperature (reference point for the scale's mechanical expansions and contractions due to changes in temperature). The point to be fixed first during installation onto the machine main unit.
⑤	Elastic fixing parts	The point to be fixed later during installation onto the machine main unit.
⑥	Signal cable (option)	The cable to connect this product and the connection destination controller. You can connect the signal cable to either left or right side of the detector head.

1.3 The Flow of Main Tasks

The following chart shows the flow of preliminary preparation and installation onto the machine main unit as tasks to use this product.

■ Preliminary preparation

Designing the Mounting Surface of the Scale Unit

"2.4 Precautions on Mounting Design of Scale Unit"

Opening the Package

Checking the Components and the Supplied Accessories

"2.2 Checking the Scale Unit and the Supplied Accessories"

Preparing the Signal Cable

"2.3 Preparing the Signal Cable"

■ Installation onto the machine

Mounting the Scale Main Unit and Adjusting the Position

"3.2 Mounting the Scale Main Unit and Adjusting the Position"

Mounting the Detector Head and Adjusting the Position

"3.3 Mounting the Detector Head and Adjusting the Position"

Connecting and Fixing the Signal Cable

"3.4 Connecting and Fixing the Signal Cable"

MEMO

2 Setup for Mounting

This chapter describes the preliminary preparation for mounting this product onto the machine.

2.1 Checking the Equipment Model

This document describes the models configured as shown below.
First, be sure to check which model will be used.

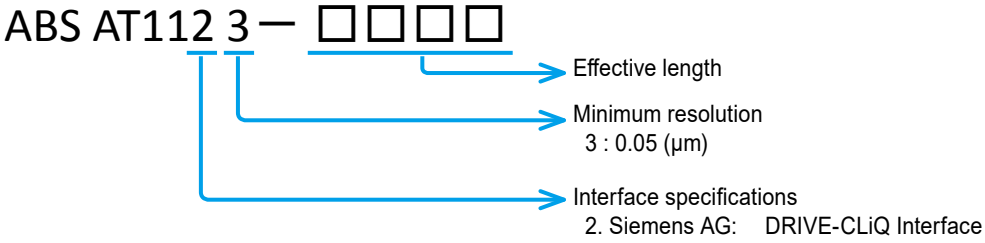

● Interface specifications and model

Applicable system		Scale model
Siemens AG	DRIVE-CLiQ interface	ABS AT1123

- DRIVE-CLiQ Interface Specifications
  AT1123 supports the Siemens SINAMICS/SINUMERIK system.
  The following software versions are supported:
  - SINAMICS S120 and SINUMERIK series:
  - SINAMICS S120 - V4.4 HF4 (04.40.23.15) or above for angular and linear encoders without "functional safety".
  - SINUMERIK 840D sl - V4.4 SP1 HF3 (04.04.01.03.005) or above for angular and linear encoders without "functional safety".
- More information on DRIVE-CLiQ interface authentication and connecting cables can be found by visiting the URL below.
  - S120 Commissioning Manual
    http://support.automation.siemens.com/WW/llisapi.dll/csfetch/68043633/IH1_012013_eng_en-US.pdf?func=cslib.csFetch&nodeid=68043641&forcedownload=true
  - MOTION-CONNECT DRIVE-CLiQ cables with M12 connector for direct measuring systems
    http://support.automation.siemens.com/WW/view/en/60179485
  - Encoders certified with DRIVE-CLiQ:
    http://support.automation.siemens.com/WW/view/en/65402168
- Effective length
  For the details of the effective length, refer to "4 Specifications" on page 29.

2.2 Checking the Scale Unit and the Supplied Accessories

A configuration of this product is shown below.

First, make sure that there are no missing components in the supplied accessories.

Also, check for any damage that may have occurred during transportation.

If you have any questions or concerns about the product, please contact the agent where you purchased the product or a Mitutoyo sales office.

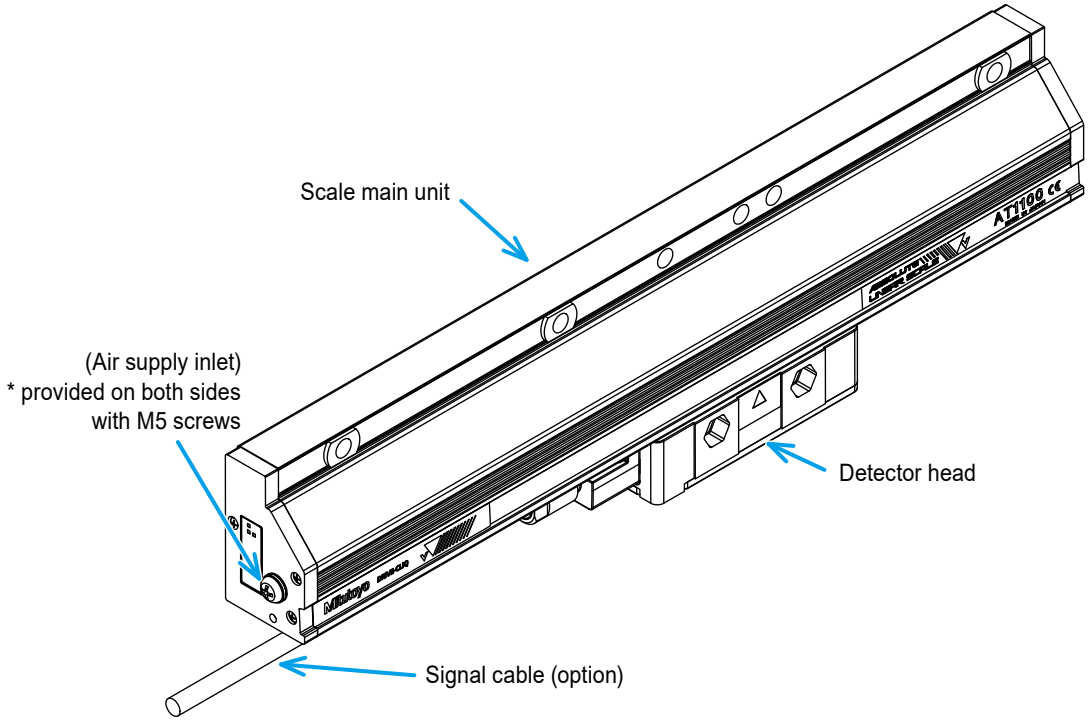

	Items	Quantity	Note
1	Scale unit	1 axis	
2	Accessories	1 set	Mounting screws, etc.
3	User's Manual (this document)	1 copy	
4	Warranty card	1 copy	
5	Inspection certificate	1 copy	

● Accessories (mounting screws, etc.)

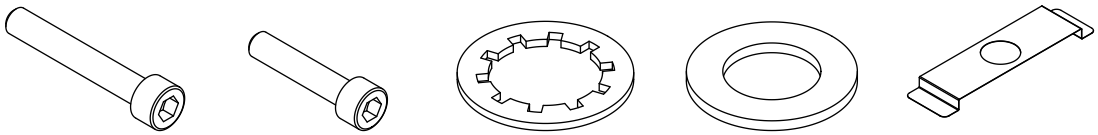

Hex socket head cap screw M6x40 | Hex socket head cap screw M6x30 | Internal teeth shake proof washer 6.6×10.2×0.5 | Nominal 6 small round flat washer | Frame holding spring

For the details of the quantity of the accessories, refer to "6.1 Quantity of the Supplied Accessories for Mounting" on page 43.

2.3 Preparing the Signal Cable

This section describes the configuration of the signal cable to be used with this product.

The signal cables are separately sold. Select an appropriate one according to your specifications.

2.3.1 Configuration of the Signal Cable

Connect the signal cable to the electric component with one of the connectors provided on either side of the detector head.

For the details of the connecting method, refer to "3.4 Connecting and Fixing the Signal Cable" on page 24.

For the specifications of the signal cable, select an appropriate cable length and output connector type.

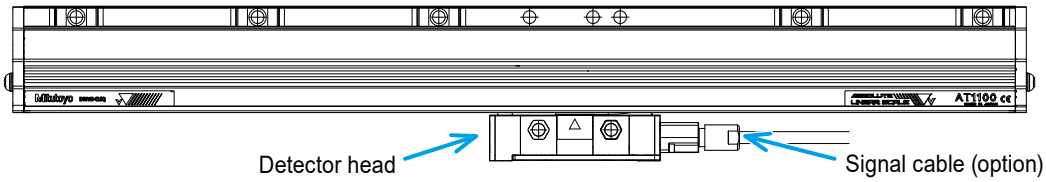

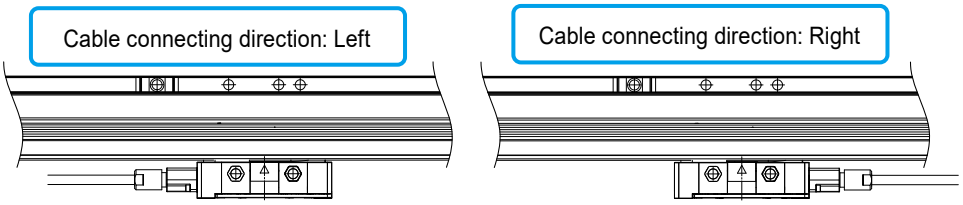

Selections

Items	Specifications
Cable length	1 m / 3 m / 6 m / 9 m / 12 m (The 12 m has the discrete-wire specification only)
Cable material	PVC sheath ø6.5, no conduit
Output connector	(1) Discrete-wire specification (for SIEMENS connection) (2) M12 connector specifications

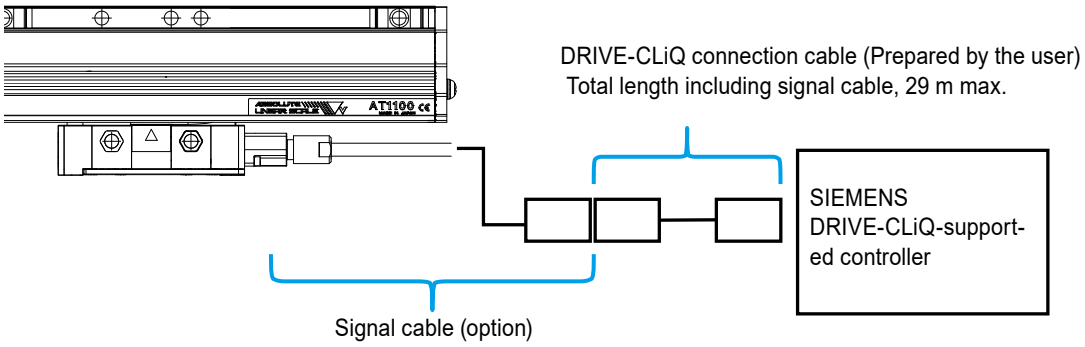

Tips

- The signal cable is an option. Select an appropriate one according to your requirements.
- For the specifications of the signal cable output signals, etc., refer to "4 Specifications" on page 29.
- When connecting additional cable at your need, make sure that the total length together with the signal cable is 29 m at maximum.

2.3.2 Bend Radius of the Signal Cable

The bend radius of the cable shall be kept within the following range.
The bend radius indicated below also applies to the case when the signal cable is extended.

■ When the detector head moves (cable is repeatedly bent)

→ Bend radius of the cable: 100 mm or more

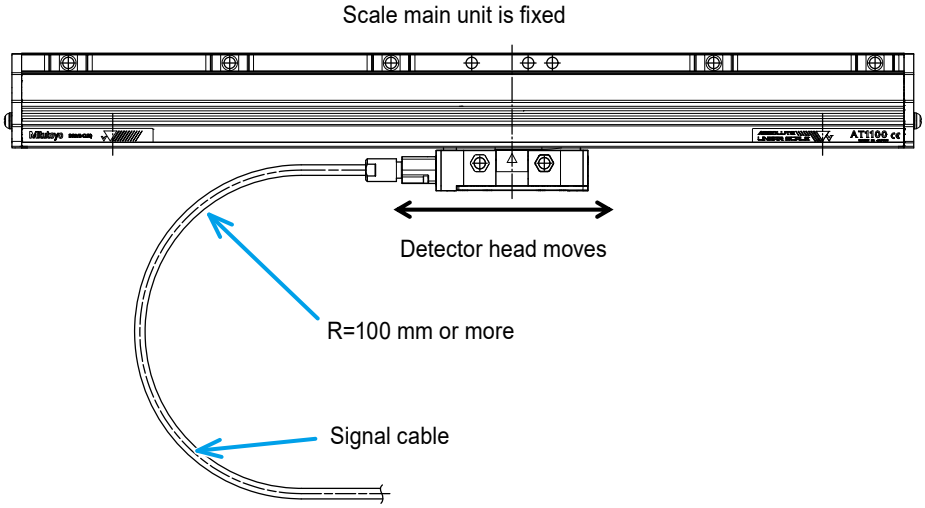

■ When the detector head is fixed (cable is fixed)

→ Bend radius of the cable: 50 mm or more

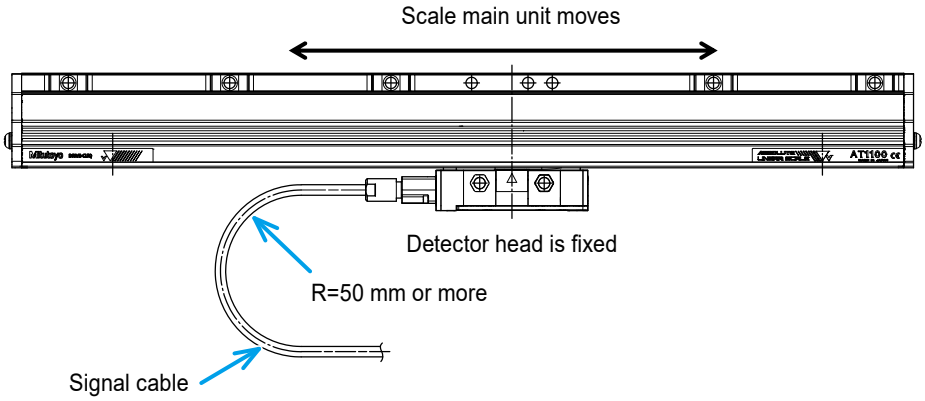

NOTICE

If a cable bend radius exceeds the allowable range, it could result in breakage of the wires or other problems.
Also, note with caution that the scale is no longer guaranteed in such a case.

Tips

- The signal cable is an option. Also, the cable clamps or other fasteners are not supplied as accessories, therefore, they must be prepared by the user.
- For the details of how to fix the cable, refer to "3.4.3 Precautions on Fixing the Cables" on page 27.

2.4 Precautions on Mounting Design of Scale Unit

The following describes some design points regarding the "mounting surface" for installing the scale unit onto the machine.

In addition, refer to "4.6 External View and Dimensional Drawings of the Scale Main Unit".

2.4.1 Datum Point Position for the Length Variation and ABS Origin Point

The fixing parts of the scale unit are divided into the full-fixing parts and the elastic fixing parts.

The "datum point position for length variation", which represents the reference point for the scale's mechanical expansions and contractions due to changes in temperature, is shown below.

Note with caution that users are not able to change this datum point position.

The internal electrical "ABS origin point" is set at 20 mm left from the edge of the effective length.

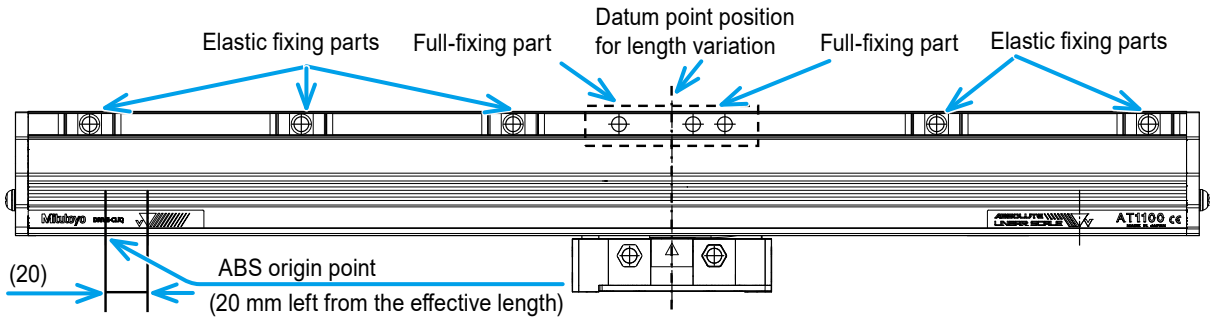

Tips

- The quantity of the elastic fixing parts is different depending on the effective length.
- The elastic fixing parts cannot be moved horizontally.
- The system's overall temperature characteristics are stabilized by setting the behavior of the center position in regard to the machine unit's temperature change and the scale unit's datum point position for length variation closer.

2.4.2 Counting Direction

When the detector head is moved rightward in the diagram below, the output serial data will increase the count (i.e., to the + side).

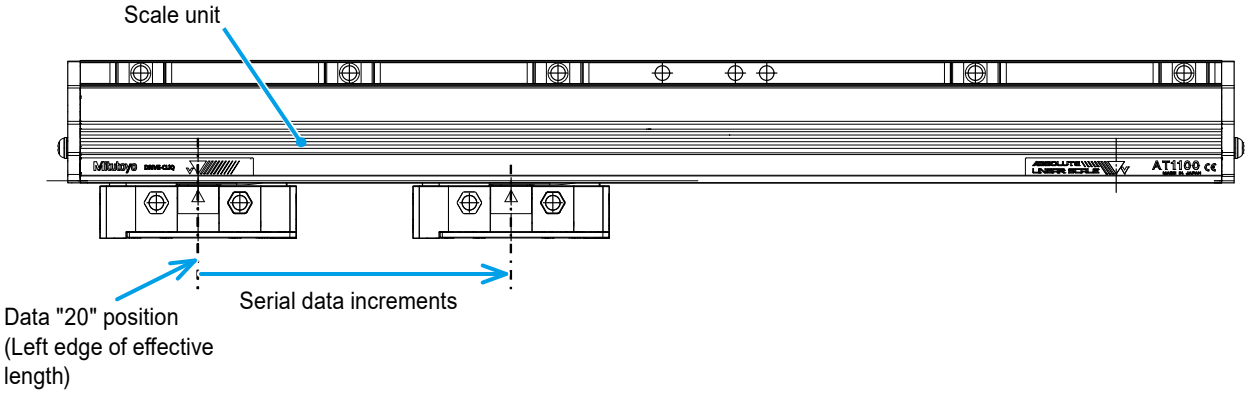

2.4.3 Checking the Maximum Travel Distance and Effective Length

Make sure that the scale's maximum travel distance (L_1) is greater than the maximum travel distance of the machine.

For the details of the effective length (L_0) and the maximum travel distance (L_1), refer to "4.6 External View and Dimensional Drawings of the Scale Main Unit" on page 38.

Also, note that the specified accuracy guaranteed range is limited to within the effective length.

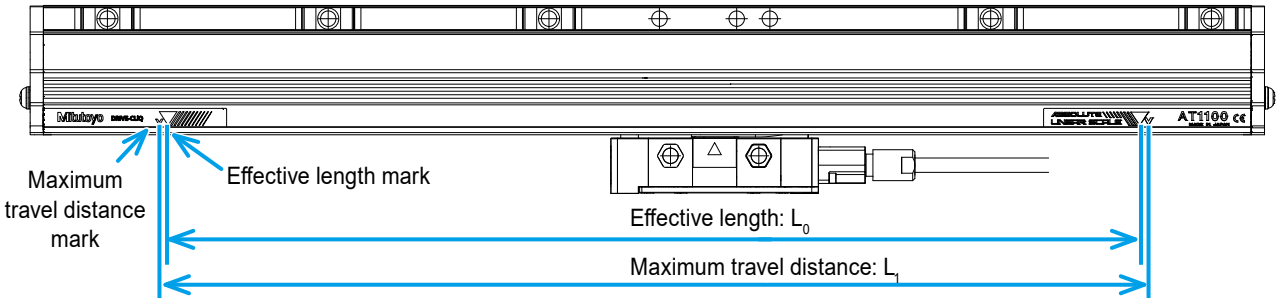

Tips

- When checking the travel range of the scale installed on the machine, make sure the maximum travel range of the machine is within the L_1 shown above and that the required accuracy range is within the L_0 shown above.
- If the maximum travel distance or the effective length of the scale is insufficient, scale size change may be necessary.

2.4.4 Scale Main Unit Mounting Directions and Cover Preparations

When installing this product, be sure to install the cover so that cutting oil, chips, etc. do not splatter onto the scale main unit.

Only the dust proof-rubber lips are used to protect the scale opening side from the intrusion of foreign objects.

Therefore, when deciding the mounting direction of the scale main unit, give consideration to the splattering directions of the cutting oil, chips, etc., since the opening side poses a greater hazard of foreign matter intrusion than the other sides.

■ The direction from which the cutting oil, chips, etc. comparatively tend to intrude

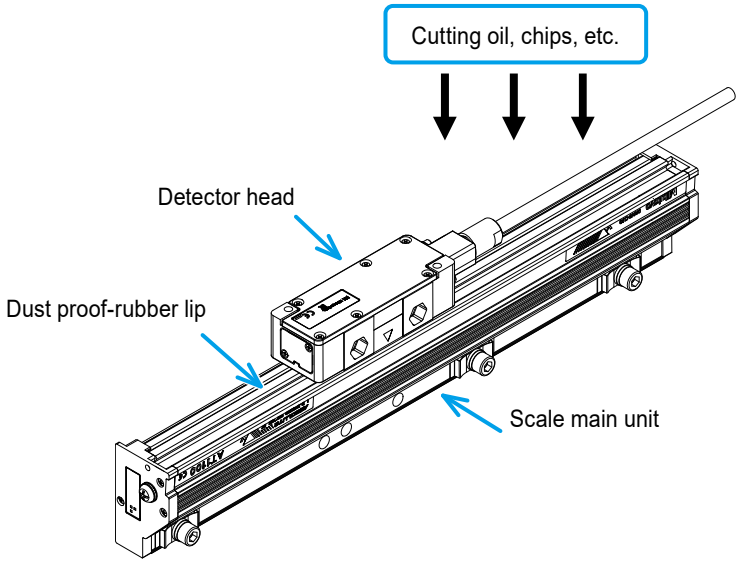

■ The direction from which the cutting oil, chips, etc. comparatively tend not to intrude

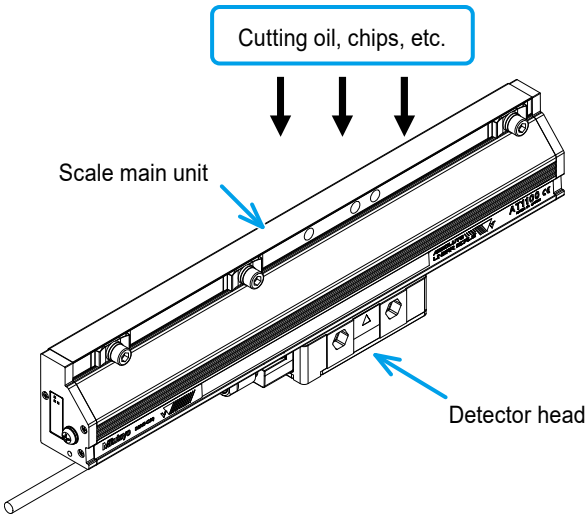

■ Mounting direction of scale main unit

● Vertical direction

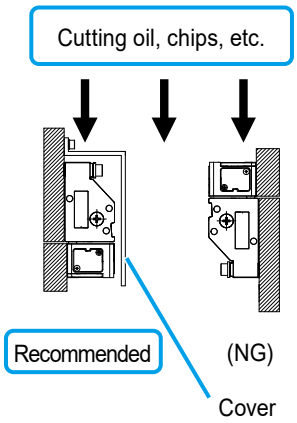

●Horizontal direction

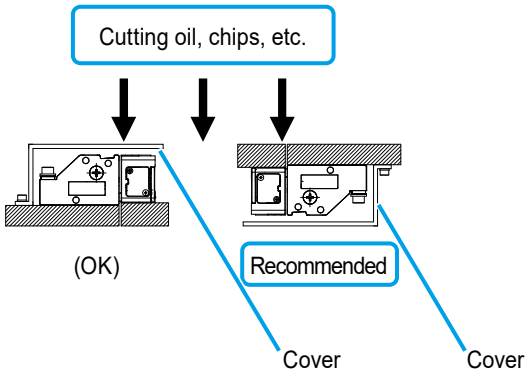

● Longitudinal direction

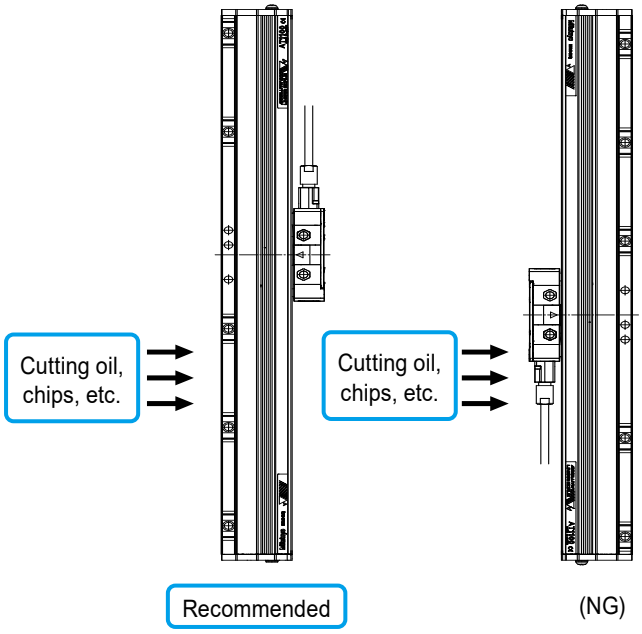

2.4.5 Precautions on Designing the Mounting Surface

The following describes precautions on designing the mounting surface.

For details of the mounting specifications, refer to "4.6 External View and Dimensional Drawings of the Scale Main Unit" on page 38.

For details of the mounting procedures, refer to "3 Mounting onto the Machine" on page 15.

Precautions

- The mounting surfaces of the scale main unit and the detector head must be machine-processed and the flatness must be 0.05/500 or below.
- There is a gap between the scale main unit and the detector head mounting surfaces, therefore, remove it by the machine processing so that the gap is within the processing tolerance of 2±0.1 mm. When adjusting the position by inserting a spacer, etc., be sure to measure the gap before mounting the scale.
- When mounting the scale main unit, the position must be adjusted in the vertical direction, as indicated in the figure below.
  It is recommended to use positioning pins, etc. to simplify the position adjustment.
  Note that the vertical reference for positioning the scale main unit is the aluminum frame surface.
- Use the head fixing block to adjust the clearance between the scale main unit and the detector head.

For the details of the mounting method, refer to "3 Mounting onto the Machine" on page 15.

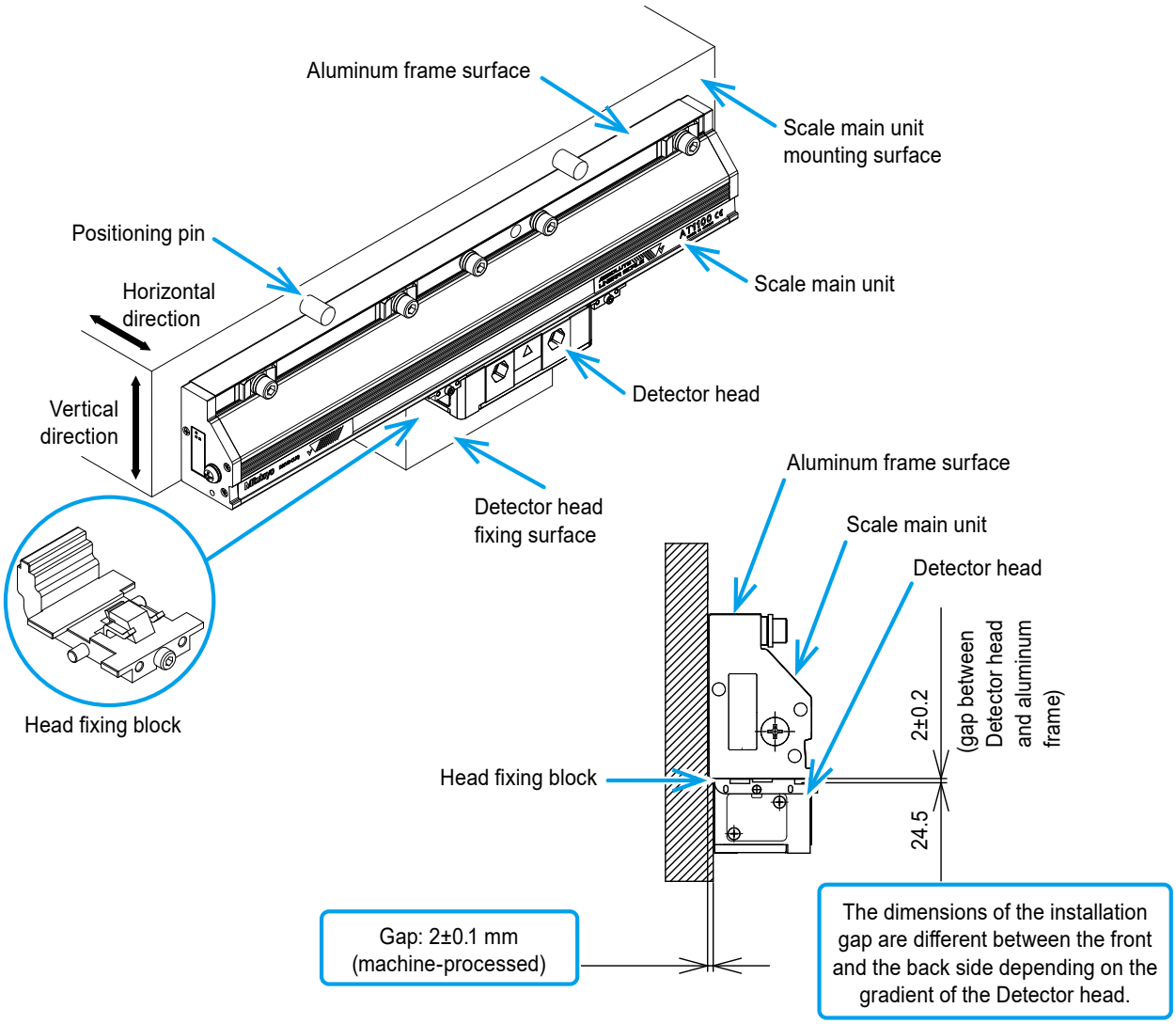

3 Mounting onto the Machine

This chapter describes the procedures, methods, and precautions required when mounting this product onto the machine.

3.1 Procedure for Mounting onto the Machine

The following describes the summary of the procedure for installing this product onto the machine.

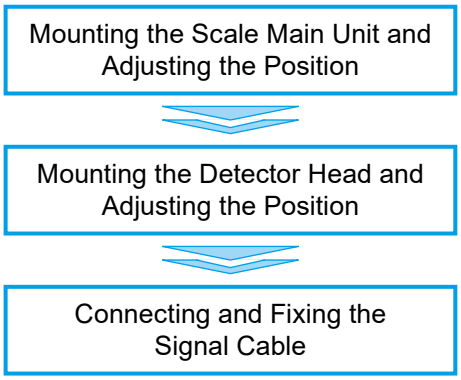

Details of each step are described in the following pages.

3.2 Mounting the Scale Main Unit and Adjusting the Position

3.2.1 Checking the Mounting Surface, etc.

Refer to 📖 "2.4.5 Precautions on Designing the Mounting Surface" and "4.6 External View and Dimensional Drawings of the Scale Main Unit", and make sure that the positional accuracy and the surface accuracy between the scale main unit and the detector head mounting surfaces are within the specified ranges.

3.2.2 Mounting the Scale Main Unit

1 Temporarily fixing the scale

Using the supplied fixing screws, temporarily fix the scale main unit onto the scale main unit fixing surface of the machine.

(Tight enough so that the scale does not move when the hands are released.)

At this point, do not fix the detector head.

(Screws and washers, etc. to be used)

- Full-fixing part → Datum point position for length variation due to temperature changes
  Hex socket head cap screw M6x30 + shake proof washer
- Elastic fixing part
  Hex socket head cap screw M6x30 + small round plain washer + special plate spring

Tips

The number of the holes at the full-fixing part is different depending on the total length of the scale.

For details, refer to "4.6.2 Dimensional Table" on page 40.

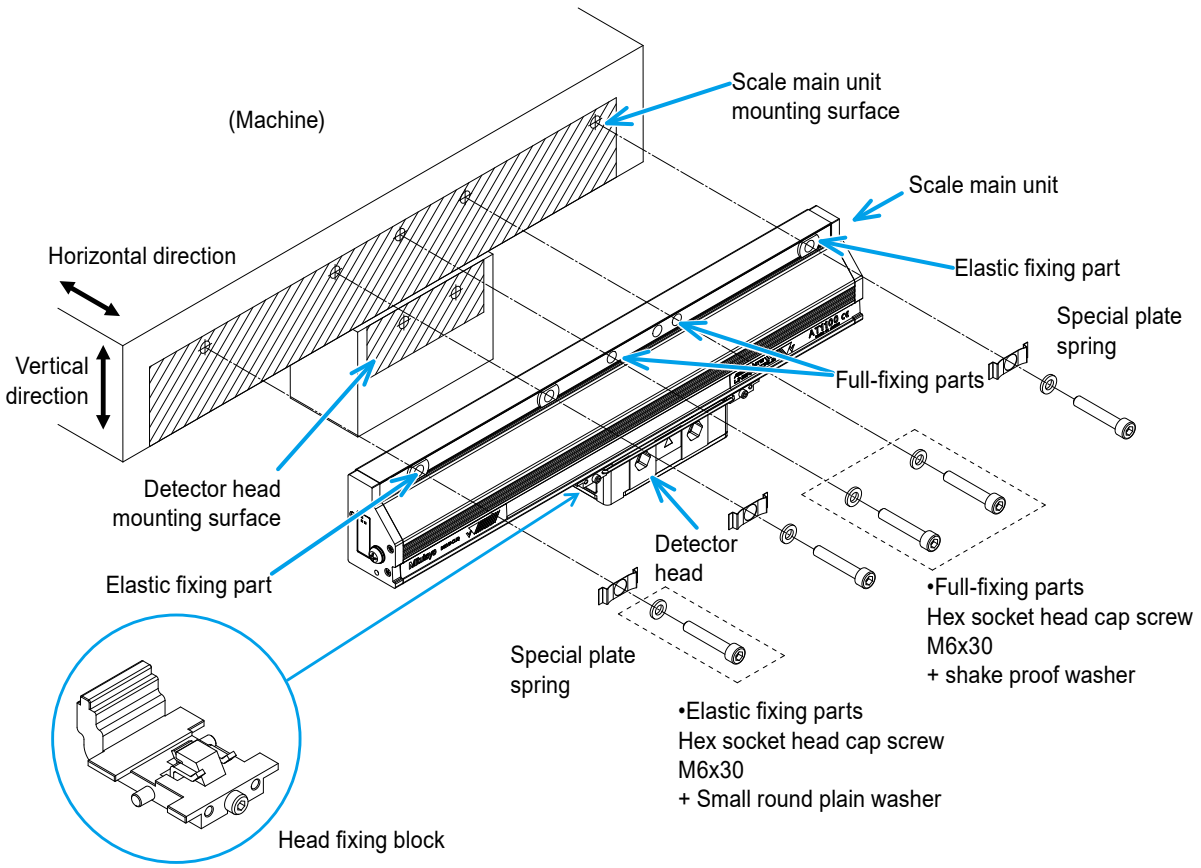

NOTICE

The head fixing blocks that fix the detector head define the positional relationship between the scale main unit and the detector head.

When mounting the scale unit on the machine, do not remove the head fixing blocks in order to keep the positional relationship.

2 Adjusting the Vertical direction of the scale

The position of this scale does not need to be adjusted in the horizontal direction (it depends on the accuracy of the scale main unit mounting surface). However, the position and dimension in the Vertical direction must be adjusted and checked.

Adjust the position and check the dimension at A in the following drawing referring to the external view and dimensional drawings of the scale unit.

For details of the external view and dimensional drawings, refer to "4.6 External View and Dimensional Drawings of the Scale Main Unit" on page 38.

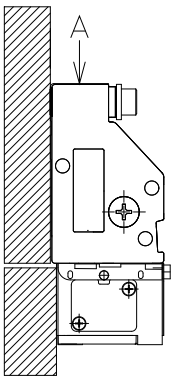

● Measuring procedure

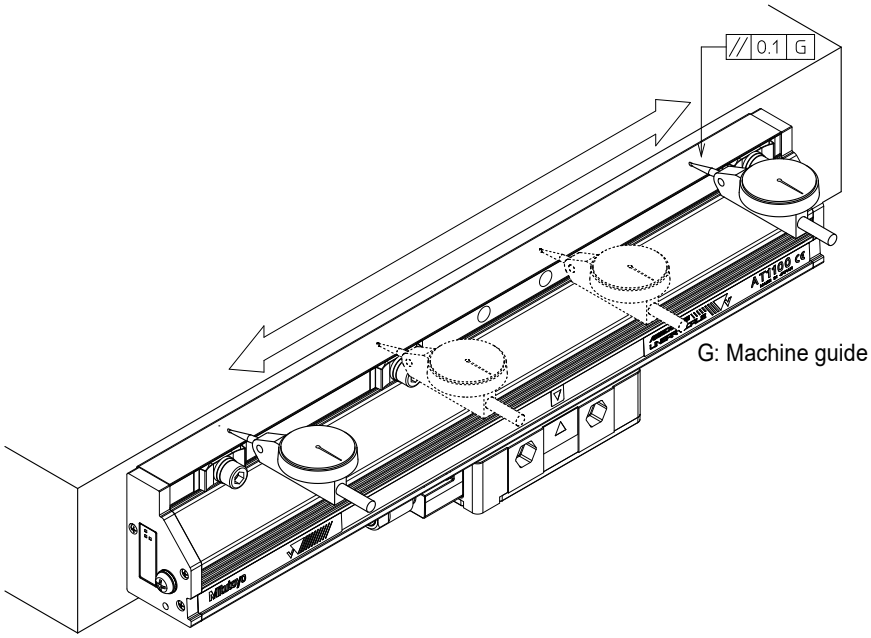

As described in "2.4.5 Precautions on Designing the Mounting Surface", this task can be simplified by using the reference pins, etc. However, after mounting, the dimensions must be checked.

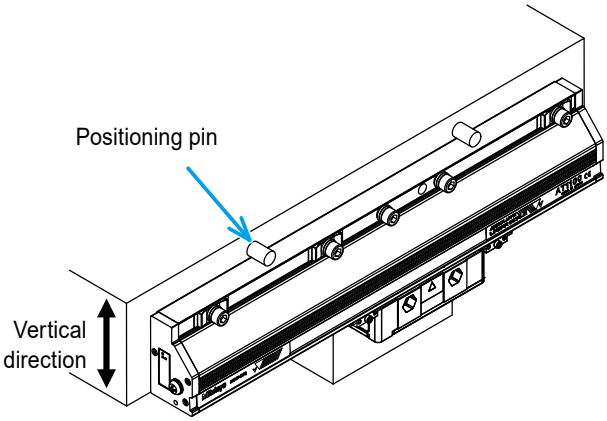

3 Fully securing the scale

After adjusting the position and checking the dimensions in the vertical direction of the scale main unit, fully tighten the fixing screws.

Note the following:

- Tightening torque: 9 N•m
- Tightening order of the screws

Be sure to tighten the full-fixing parts first, and then tighten the elastic fixing parts.

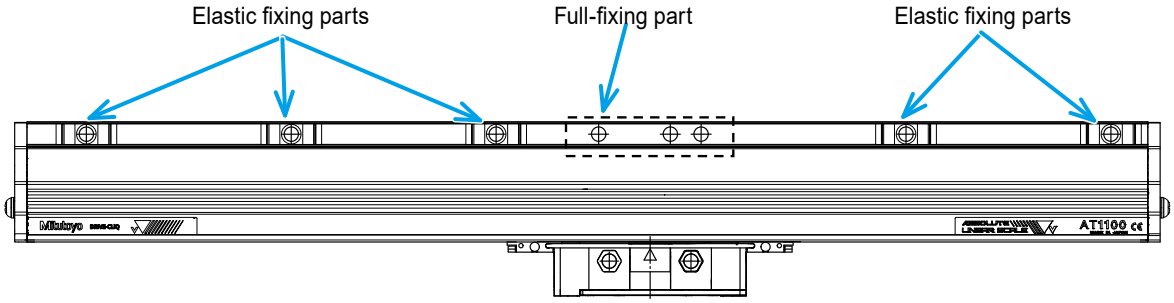

- Fixed state of elastic fixing part

  The fixing state of the elastic fixing part is shown below. Use this figure as a reference.

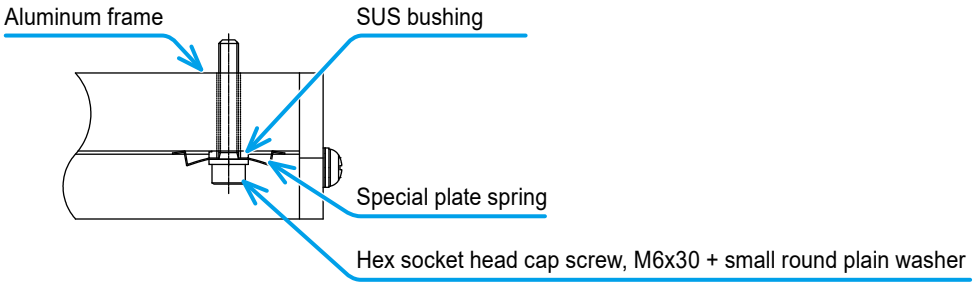

3.3 Mounting the Detector Head and Adjusting the Position

After completing the steps described in "3.2 Mounting the Scale Main Unit and Adjusting the Position", follow the procedures below to mount the detector head.

3.3.1 Mounting the Detector Head

1 Check the parallelism of the detector head mounting surface.

For details, refer to "4.6 External View and Dimensional Drawings of the Scale Main Unit" on page 38.

2 Remove the connecting rod that fixes the head fixing blocks.

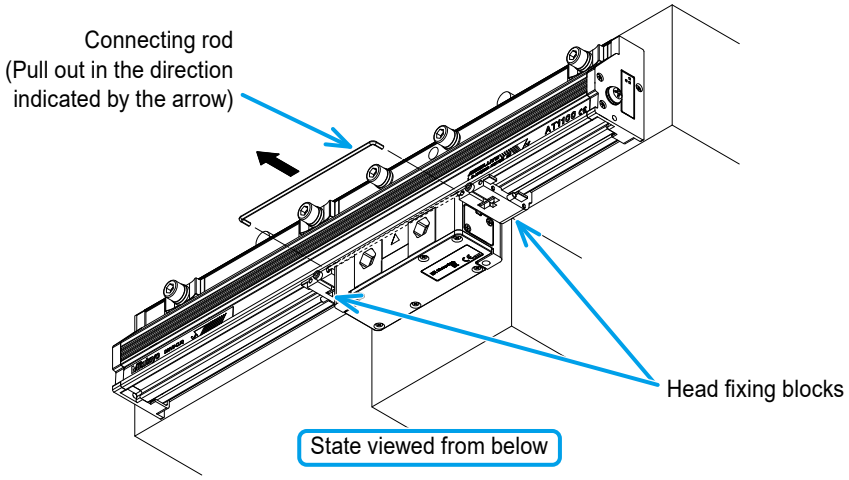

3 Fix the detector head using the supplied fixing screws.

Detector head fixing screws: M6x40 (tightening torque: M6 screw: 9 N•m)

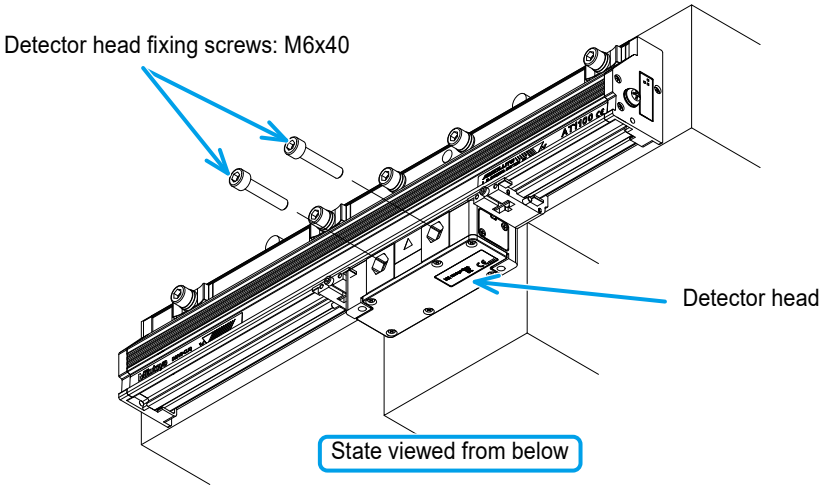

NOTICE

If there is a clearance between the detector head and the mounting surface, prepare a spacer to fill the clearance. The scale unit may be damaged if the fixing screws are tightened forcibly while there is a clearance.

4 Loosen the clamp screws that fix the head fixing blocks with around 5 to 8 turns, and then tilt the clamp screws. (Note that if the clamp screw is loosened too much, the metal fitting of the head fixing block may fall.)

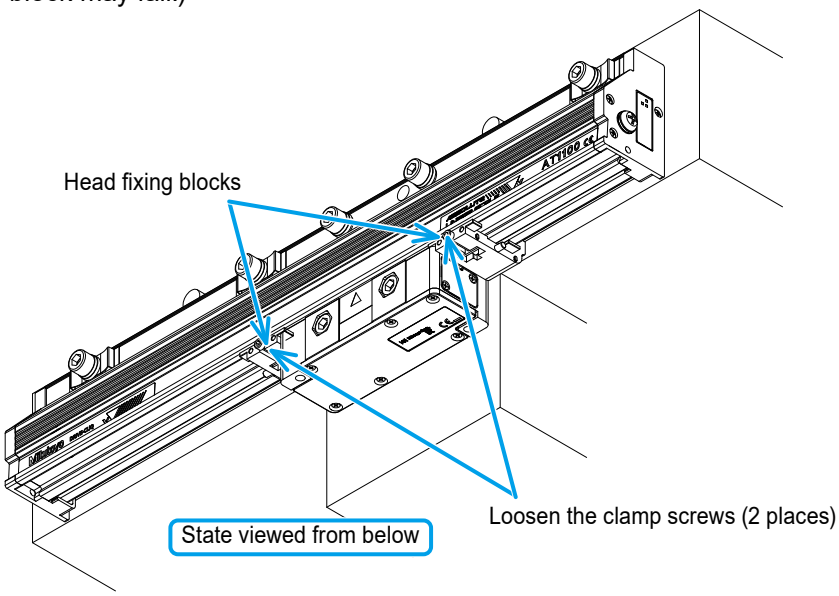

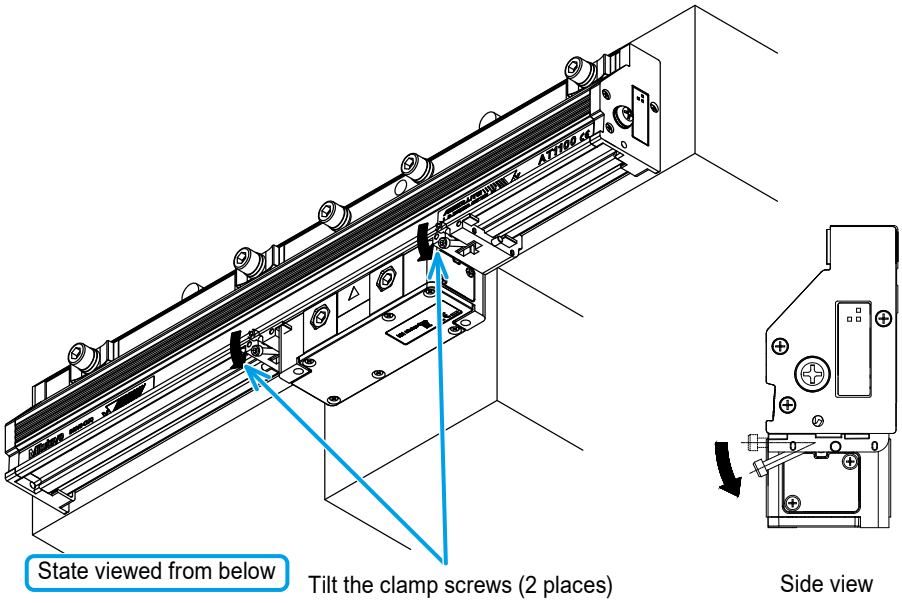

5 Remove the head fixing blocks in the direction indicated by the arrows.

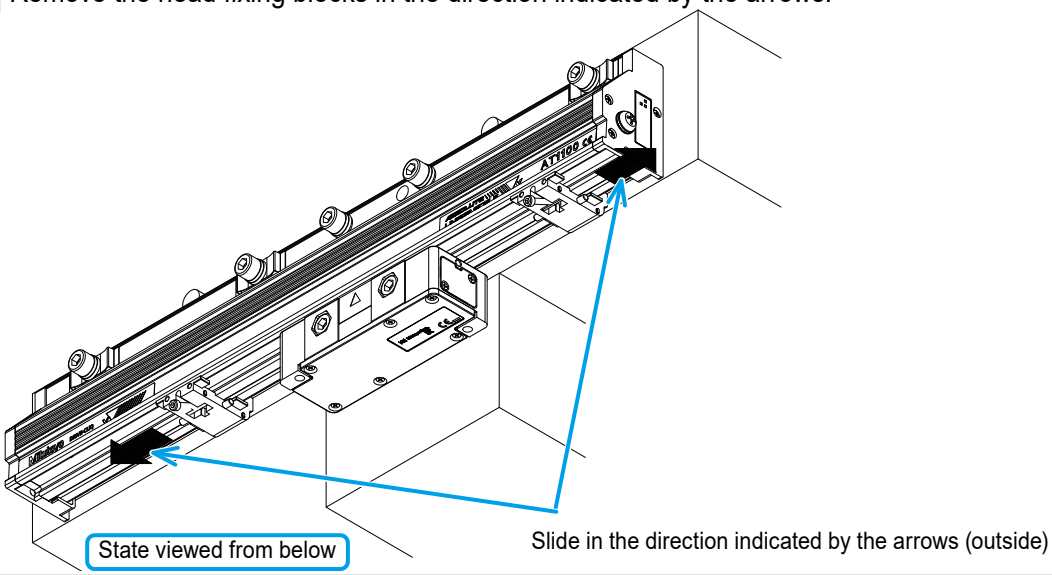

6 Check whether the head fixing block pressed in the direction of the arrow smoothly slips, and whether there is no gap when it is inserted. (Check it for the head fixing blocks on the both ends.)

The mounting is complete.

If the head fixing block cannot be slid out, or the insertion is too tight, check the positional relationship of the scale main unit and detector head mounting surface.

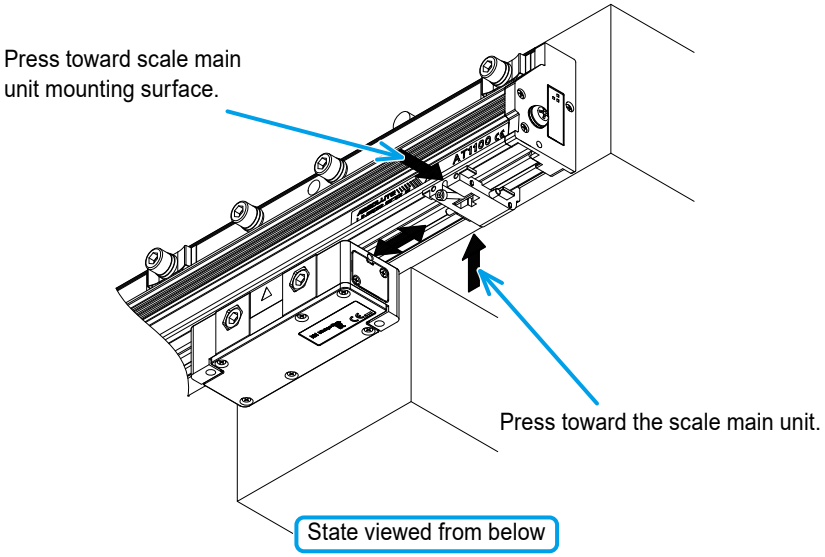

7 Other mounting examples

Refer to the diagram below when mounting the detector head from the front face or from the bottom face.
Note that the detector head fixing screws and nuts to be used in the examples below are not supplied, and shall be prepared by the user.

- Mounting example 1

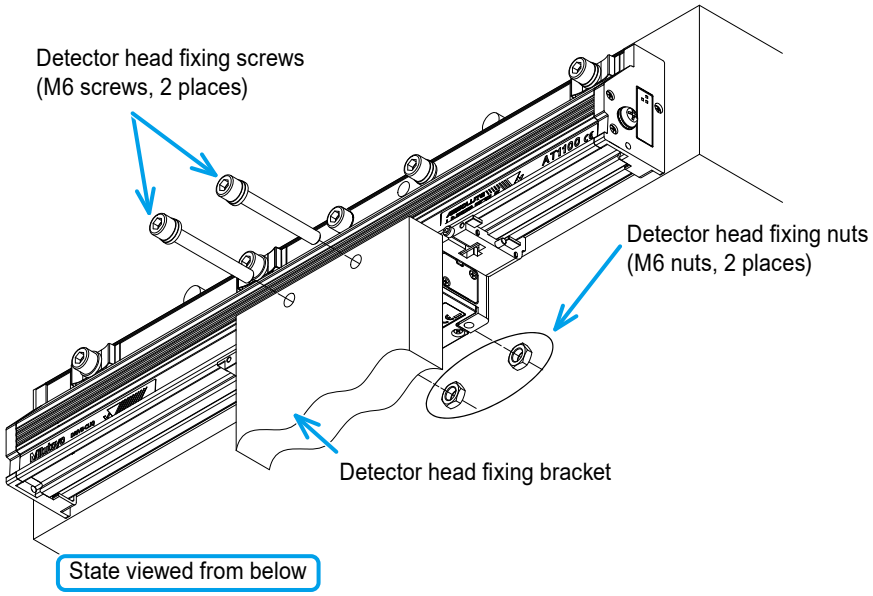

- Mounting example 2

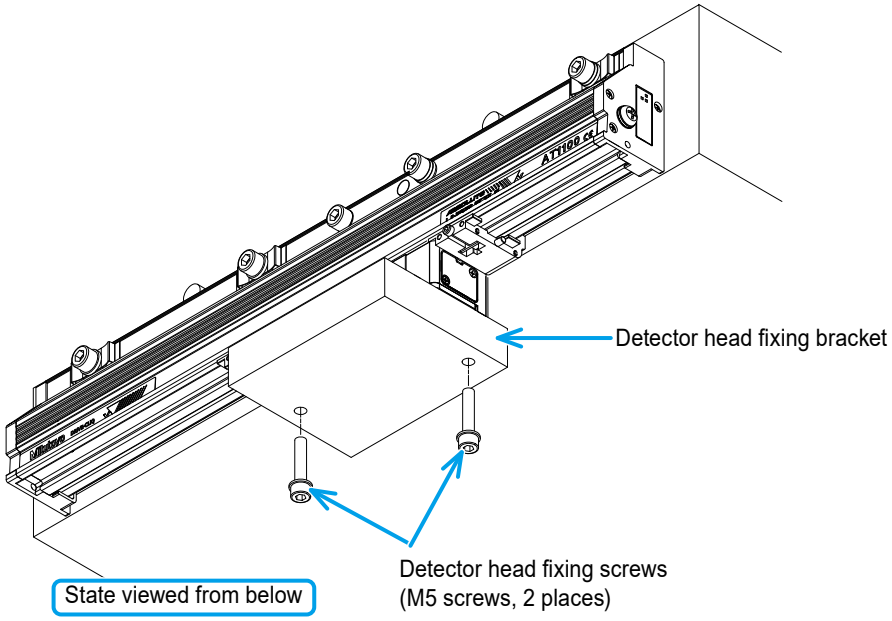

NOTICE

When designing a detector head fixing bracket, note the following:

- Be very careful of the rigidity of the bracket.
- When fixing the detector head from the front face as shown in the "Mounting example 1," make sure that the bracket for fixing the detector head and the head fixing block clamp screws do not interfere with each other, referring to the head fixing block dimensional drawing below.

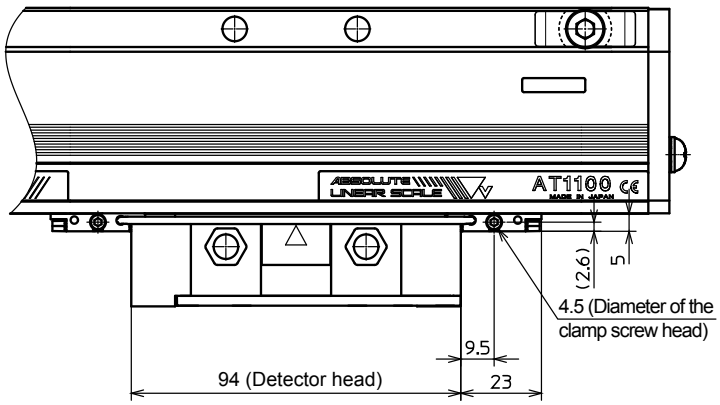

3.4 Connecting and Fixing the Signal Cable

3.4.1 Cable Connection and Operation Check

An example of the system configuration is shown below.

For the details of the cables, refer to "4 Specifications" on page 29.

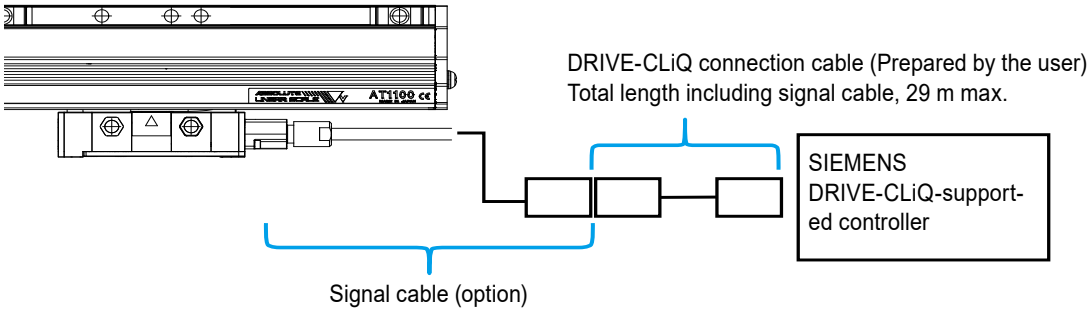

■ Connect the cables and check operations

1 According to "3.4.2 Connecting the Signal Cable", connect the detector head and the signal cable.

After that, connect the signal cable to the SIEMENS DRIVE-CLiQ supported controller via DRIVE-CLiQ connection cable. After completing the cable connections, make sure the screws on the connector plug of the signal cable are fully tightened.

Tips

When connecting additional cable at your need, make sure that the total length together with the signal cable is 29 m at maximum.

2 Turn on the power and check the operations, functions, and performance of the scale.

NOTICE

- After turning on the power, if the scale unit does not operate normally, check the connections first. If the scale does not operate normally even after the status of connections is checked and the power is supplied again, investigate the cause, following the instructions in "5 Troubleshooting".
- When checking the scale operations, be very careful that no cables are being pinched by the machinery.
- When connecting the connectors, if swarf or other foreign objects are sandwiched in, that may cause malfunctions.

3.4.2 Connecting the Signal Cable

1 Decide the signal cable connecting direction.

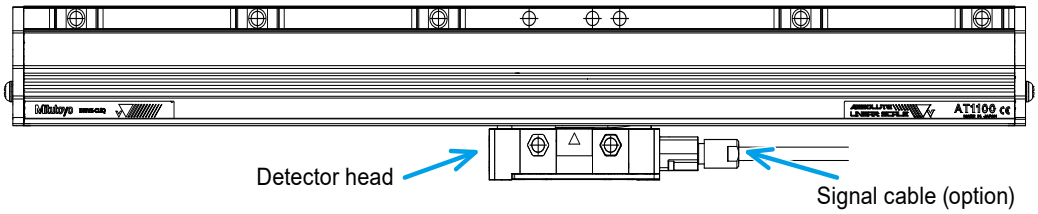

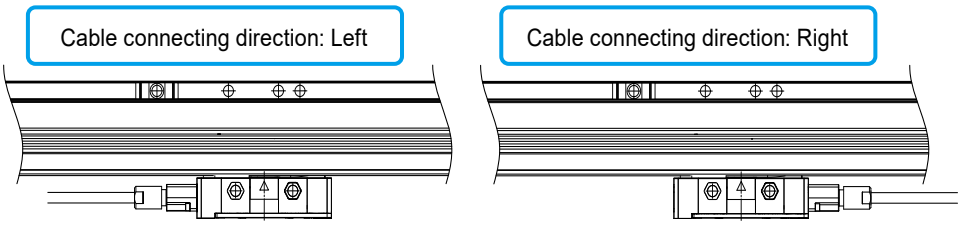

Initially, the signal cable outlet panel is provided on the both sides of the detector head.
Remove the signal cable outlet panel of the side to which the cable is connected.
Also, there is a signal cable outlet seal between the signal cable outlet panel and the detector head.
When connecting the cable, do so making sure that the signal cable outlet seal does not come off.
If it does, insert it into the groove of the detector head.

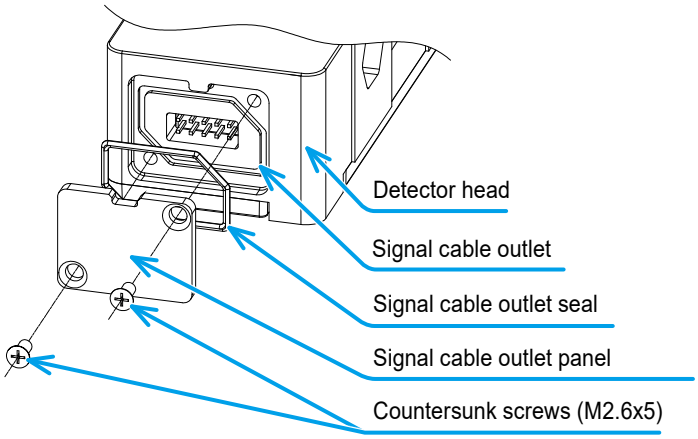

2 Connect the signal cable to the detector head.

Connect it engaging the convex part of the cable outlet with the concave part of the connector.

A signal cable outlet seal is set between the detector head and the connector to ensure water-resistance performance. When connecting the cable, make sure to confirm that a signal cable outlet seal is set in the groove of the signal cable outlet.

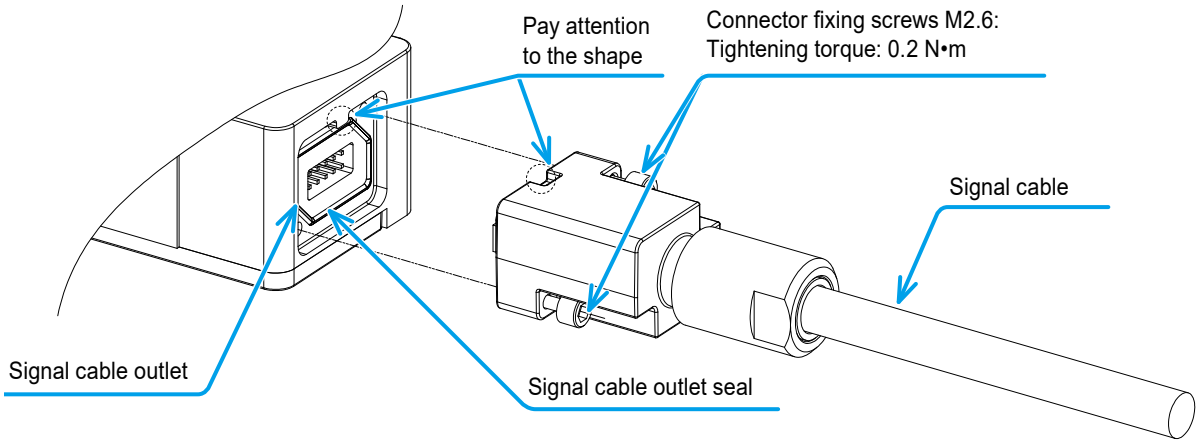

Tips

When reattaching the signal cable outlet panel, make sure that the convex part of the detector head engages with the concave part of the signal cable outlet panel.

When connecting the cable, make sure to confirm that the signal cable outlet seal is set in the groove of the detector head as in 2.

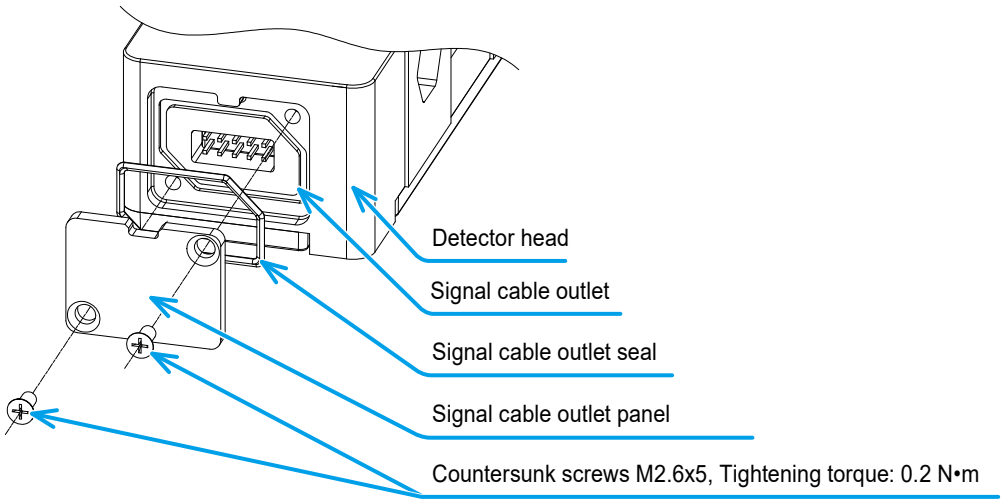

NOTICE

Although the detector head has a water-resistant structure, it may not function as it is supposed to if the tightening torque is insufficient or if the signal cable outlet seal is improperly installed. To ensure waterproofness, make connections according to the procedures described above.

3.4.3 Precautions on Fixing the Cables

Be sure to note the following when fixing the cables.

1 Perform wiring paying attention to the twisting or bends of the cables.

Note that the signal cable and DRIVE-CLiQ connection cable may malfunction due to noise, if bundled with other cables that may cause electrical noise, or if they are located near a switching relay dealing with a large current.

2 Use cable clamps or other fasteners to secure the cables.

Note especially the following when securing the cables:

NOTICE

- Do not bend the cables.
  Also, do not bend the cables beyond the bend radius range specified in "2.3.2 Bend Radius of the Signal Cable".

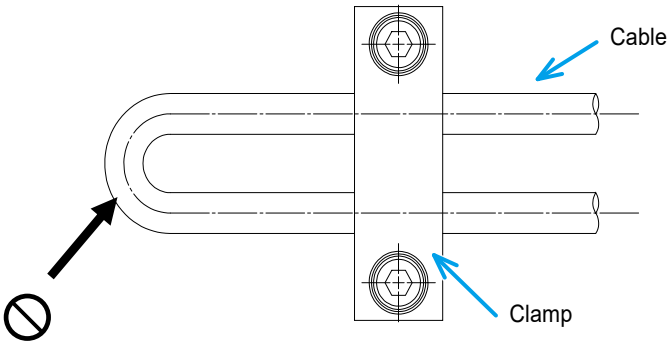

- If the cables are going to be repeatedly bent, try to reduce stress applied to near the root of the clamping part.

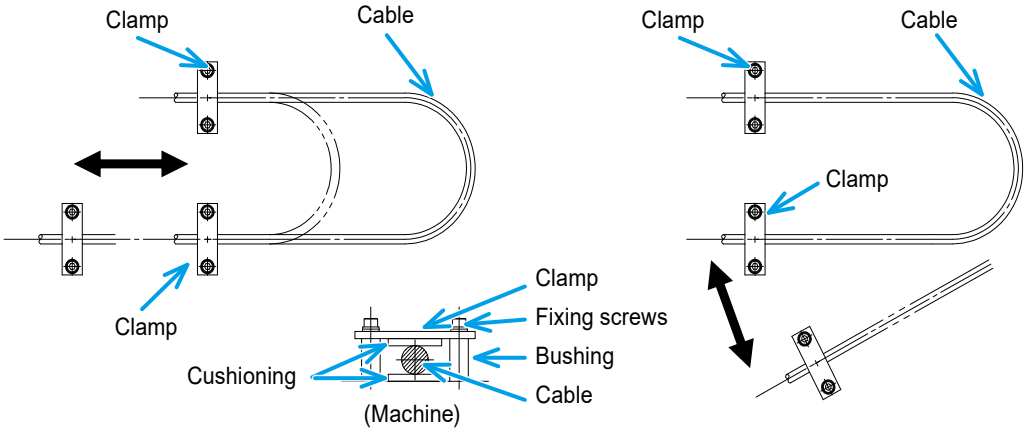

NOTICE

- Consider the shake due to vibration, etc. given to connectors.

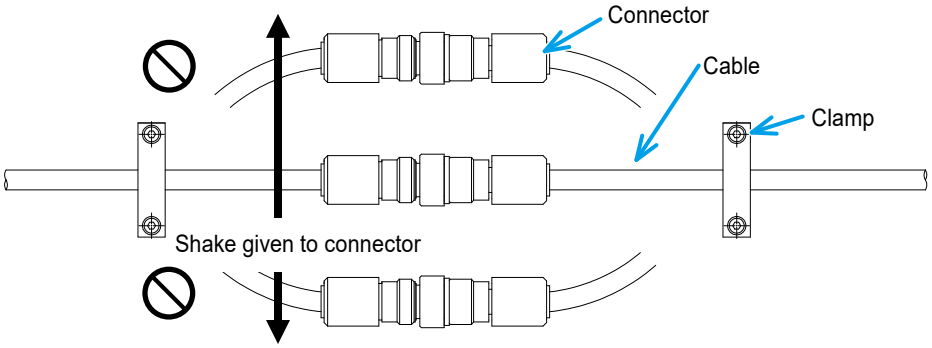

- Make sure that excessive bends do not occur on the root of on the signal cable in the full stroke.

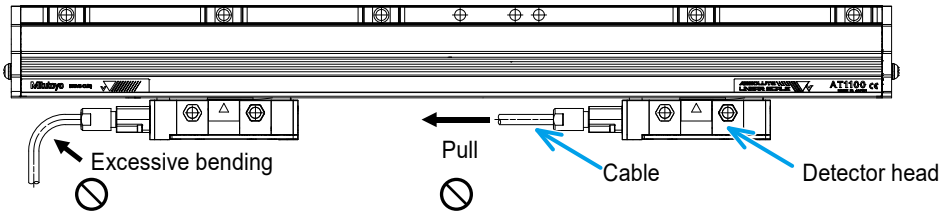

4 Specifications

This chapter describes the specifications of this product.

4.1 Specifications

Items		Description
Detection method		Electromagnetic induction
Effective length: L_0 (mm)		24 types:140,240,340,440,540,640,740,840,940,1040,1140,1240,1340,1440,1540,1640,1740,1840,2040,2240,2440,2640,2840,3040
Section size		85x37 (mm)
Cable configuration		"2.3 Preparing the Signal Cable" on page 7
Position Data	"0" position	"2.4.1 Datum Point Position for the Length Variation and ABS Origin Point" on page 10
Resolution		0.05 µm
Indication accuracy (20 °C)		Effective length L_0 = 140 mm - 2040 mm : $(3+5L_0/1000)$ µm Effective length L_0 = 2240 mm - 3040 mm : $(5+5L_0/1000)$ µm
Operation temperature/ humidity range		0 °C - 50 °C 20 % - 80 % RH (non-condensing)
Storage temperature/humidity range		-20 °C - 70 °C 20 % - 80 % RH (non-condensing)
Power supply voltage		24 V DC (DRIVE-CLiQ:19 V - 30.8 V)
Maximum consumption current		140 mA (Max)
Signal cable length		29 m at maximum (total of signal cable + DRIVE-CLiQ connection cable)
Maximum response speed		3 m/sec
Coefficient of thermal expansion		≈$8x10^{-6}$/K
Vibration resistance (55 - 2000 Hz)		≤ 196 m/s^2(20G) * With no error
Shock resistance (11 ms 1/2 sin)		Effective length L_0 = 140 mm - 2040 mm : ≤ 343 m/s^2 (35G) * With no error Effective length L_0 = 2240 mm - 3040 mm : ≤ 294 m/s^2 (30G) * With no error
Interface		■AT1123 Siemens AG: DRIVE-CLiQ Interface
CE marking/ UKCA marking		EMC Directive/Electromagnetic Compatibility Regulations: EN 61326-1 Immunity test requirement: Clause6.2 Table 2 Emission limit: Class B RoHS Directive/The Restriction of the Use of Certain Hazardous Substances in Electrical and Electronic Equipment Regulations: EN IEC 63000

4.2 Signal Cable Specifications

Note that the output signal of the signal cable differs according to the interface specifications.

4.2.1 Output Signal

Note that the output signal of the signal cable of AT1123 differs from that of AT1153 or AT1143.

■ Cable of discrete-wire specification (for SIEMENS connection)

Cable color	Signal	Cable color	Signal
White/Brown	+24 V	White/Orange	TXP
Brown	GND	Orange	TXN
White/Blue	TEST	White/Green	RXP
Blue	$\overline{\text{TEST}}$	Green	RXN
		Shielded wire	F.G

* Keep the test pins (TEST,$\overline{\text{TEST}}$) unconnected.

* Connect the shielded wire to the ground bar.

* A cable of discrete-wire specification (for SIEMENS connection) cannot be used for ABS AT1153 or ABS AT1143.

■ Cable of M12 connector specification

Pin No.	Signal	Pin No.	Signal
1	+24 V	5	GND
2	TEST	6	TXN
3	RXP	7	TXP
4	RXN	8	$\overline{\text{TEST}}$
		Shield sleeve	F.G

* Keep the test pins (TEST,$\overline{\text{TEST}}$) unconnected.

4.2.2 Cable Dimensions

■ Cable of discrete-wire specification (for SIEMENS connection)

Detector head side (custom)
Waterproof

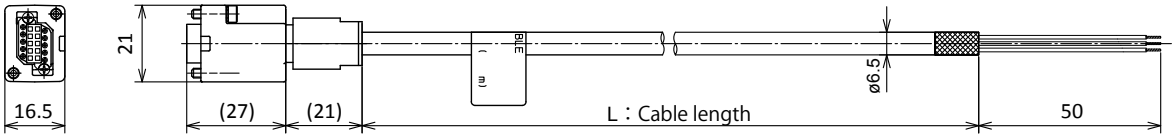

Part No.	Part Name	Cable length (m)
06AFM103-1	AT1100S Signal Cable discrete wire type 1 m	1
06AFM103-3	AT1100S Signal Cable discrete wire type 3 m	3
06AFM103-6	AT1100S Signal Cable discrete wire type 6 m	6
06AFM103-9	AT1100S Signal Cable discrete wire type 9 m	9
06AFM103-12	AT1100S Signal Cable discrete wire type 12 m	12

■ Cable of M12 connector specification

Detector head side (custom)
Waterproof

NC side (M12)
Waterproof

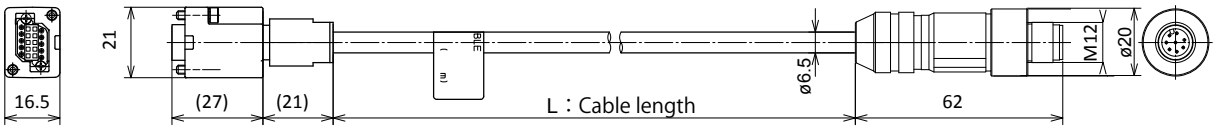

Part No.	Part Name	Cable length (m)
06AFL121-1	AT1100S Signal Cable M12 Connector 1 m	1
06AFL121-3	AT1100S Signal Cable M12 Connector 3 m	3
06AFL121-6	AT1100S Signal Cable M12 Connector 6 m	6
06AFL121-9	AT1100S Signal Cable M12 Connector 9 m	9

4.3 System Configuration (Example)

The following describes an example of the system configuration.
Please note that some parts need to be prepared by the user.

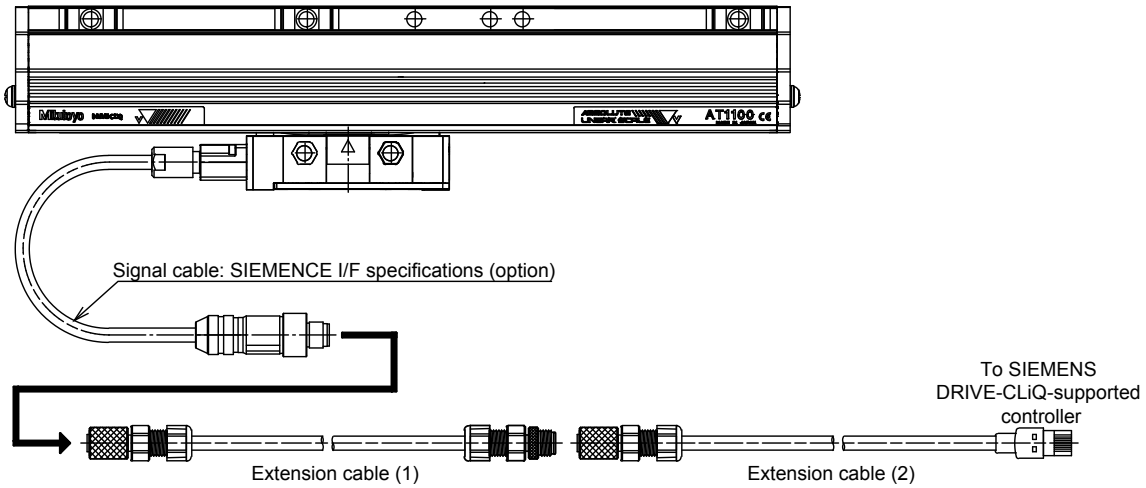

* Extension cable (1) and (2) need to be prepared by the user.

DRIVE-CLiQ connector
M12 8-pin

Pin No.	Signal
8	$\overline{\text{TEST}}$
2	TEST
7	TXP
6	TXN
3	RXP
4	RXN
1	24V
5	0V
connector shell	F.G

Shielded wire

DRIVE-CLiQ connector
M12 8-pin

Signal	Pin No.
$\overline{\text{TEST}}$	8
TEST	2
TXP	7
TXN	6
RXP	3
RXN	4
24V	1
0V	5
F.G	connector shell

DRIVE-CLiQ connector
M12 8-pin

Pin No.	Signal
8	$\overline{\text{TEST}}$
2	TEST
7	TXP
6	TXN
3	RXP
4	RXN
1	24V
5	0V
connector shell	F.G

Shielded wire

DRIVE-CLiQ connector
RJ45 IP20

Signal	Pin No.
TXP	3
TXN	6
RXP	1
RXN	2
24V	A
0V	B
F.G	connector shell

Connection example (1)

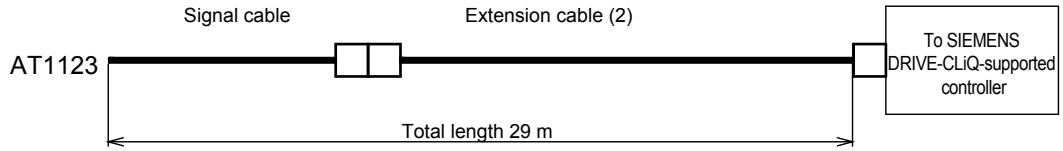

Connection example (2)

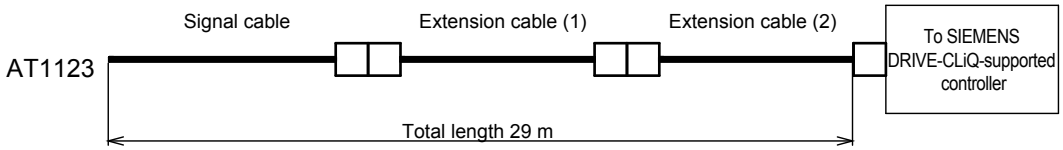

- Extension cable (1) SIEMENS Part No.: 6FX8002-2DC34-□□□□
- Extension cable (2) SIEMENS Part No.: 6FX8002-2DC30-□□□□

Tips

- Extension cables need to be prepared by the user.
- Select cables so that the total length of the signal cable and extension cable becomes 29 m or less.
- Contact SIEMENS for specifications of their extension cables and how to purchase.
- Keep the test pins (TEST,$\overline{\text{TEST}}$) unconnected.

4.4 Alarm Detection Function

This product is equipped with various alarm detection functions inside the detector head.

4.4.1 Alarm Detection Function

Alarms can be categorized into two groups: Caution and Error.

The Caution indicates the temperature error inside the detector head. In those cases, once the causes are removed, the normal state can be restored.

As for the Error, signal intensity errors or absolute values detection errors, etc. are detected. Once these errors occur, the error detection state will be maintained until they are reset, or the power is re-supplied.

<<List of alarm detections>>

Alarm detection types		Description
Caution	Temperature error	It is output when the internal temperature of the detector head exceeds 65 °C (the ambient temperature exceeds 60 °C). The normal state will be restored when it becomes 60 °C or lower.
Error	Signal strength error	It is output when the signal intensity drops to 15 % or lower, or exceeds 100 %.
	Transducer error	It is output when an abnormal balance in the internal signal is detected.
	Absolute value detection error	It is output when abnormal absolute value data are detected.
	Hardware error	It is output when an error is detected inside the hardware.
	Initialization error	It is output when the initialization of the system failed after the power was turned on.
	Overspeed	It is output when the response speed has exceeded the limit (3 m/s).

4.4.2 Alarm Code Content

The table below describes the linkage between the alarm code output from the controller and the error inside the scale, as well as the cause and remedy for it.

SIEMENS alarm code	Error inside the scale	Cause and Remedy
• F3x137	• Overspeed • Initialization error • Hardware error • Absolute value detection error • Transducer error • Signal strength error	**<<Cause>>** • The scale detected an error. **<<Remedy>>** • Check the mechanical fixing state of the scale. • Check the power supplied to the scale (power ripple noise) and electrical noises. • If there is no defect in the mounting condition or the power-related state, the scale needs to be replaced.
• F3x405	• Temperature error	**<<Cause>>** • The detector head detected a caution. The position data is correct; however, it is necessary to check the fixing state and the operating condition. **<<Remedy>>** • Is the ambient temperature of the detector head over 60 °C? => If it is over 60 °C, check the driving condition (speed, acceleration).

Tips

The SIEMENS alarm codes in the above table are displayed on the SIEMENS application (STARTER).

4.5 Air Purging

This product is equipped with an air purging mechanism. The air purging mechanism improves resistance to the environment (over coolant or dust) of the linear scale by supplying clean compressed air inside the scale main unit.

As shown in "4.5.3 Connection", supply compressed air through the specified air device by connecting to either of the M5 screw holes provided at both sides of the scale main unit.

4.5.1 Air Flow Supplied to the Scale

Supply air flow at 10 L to 20 L/min per scale.

Air should slightly come out from the closed part of the dust-proof rubber lips.

Adjust the air flow referring to the descriptions below.

- When using Mitutoyo's fixed diaphragm (ID: Ø0.9)

  Make adjustment with the air pressure, so that the air flow becomes 10 L to 20 L/min (per scale unit).

  (Ref.) When supplying air to a scale: Air flow approx. 12.7 L/min with 0.1 MPa of air pressure
  Air flow of approx. 19 L/min with 0.2 MPa of air pressure

- When using other fixed diaphragms

  Make adjustment with the air pressure, so that the air flow becomes 10 L to 20 L/min (per scale unit).

  For information on the air flow and pressure relationships, refer to the flow characteristics (ID of the fixed diaphragm and flow-pressure relations) provided by each pneumatic component manufacturer.

- When using flow rate adjustable valves

  Make adjustments so that the air flow becomes 10 L to 20 L/min (per scale unit).

NOTICE

Make sure not to supply a large amount of air before making adjustments. Otherwise, it may cause components to break thereby resulting in malfunctions.

4.5.2 Recommended Air Supply Devices

An air dryer is not required for this product.

Do not supply air to the air supply device directly from the compressor. Make sure to supply compressed air through a main line air filter. The oil mist filter element should be replaced after a year.

Attach the fixed diaphragm to the scale side.

The specifications and the manufacturer models for recommended air devices are described in the following.

If the specifications are identical, it is fine to purchase and use a product manufactured by another company.

Air supply unit

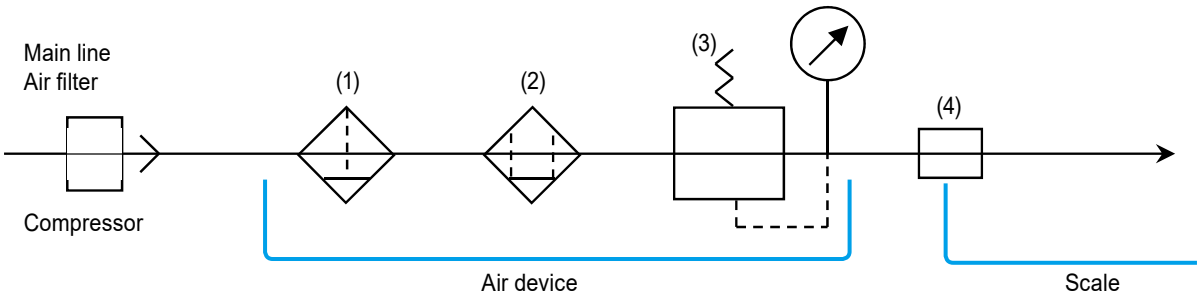

No.	Component	Appearance	Specifications	Part No.	
				Order No. (Mitutoyo)	Manufacturer Model
(1)	Air filter		• Fluid: Compressed air • Maximum operating pressure: 1.0 MPa • Proof pressure: 1.5 MPa • Maximum particle diameter (filtration): 5 μm • Secondary oil concentration:-	-	F1000-8-W (CKD)
(2)	Oil mist filter		• Fluid: Compressed air • Maximum operating pressure: 1.0 MPa • Proof pressure: 1.5 MPa • Maximum particle diameter (filtration): 0.01 μm • Secondary oil concentration: 0.01 mg/m^3 or below • Element replacement: 1 year (6000 hours) or when pressure is lowered 0.1 MPa or lower	-	M1000-8-W (CKD)
(3)	Regulator		• Fluid: Compressed air • Maximum operating pressure: 1.0 MPa • Proof pressure: 1.5 MPa • Set pressure range: 0.05 to 0.85 MPa	-	R1000-8-W (CKD)
(4)	Fixed diaphragm		• Fluid: Air • Set pressure range: 0.1 to 0.9 MPa • Screw tightening torque: 1.0 to 1.5 N•m • Flow at 0.1 MPa pressure: approx. 12.7 L/min • Flow at 0.2 MPa pressure: approx. 19 L/min (per axis)	06ACJ155	PC6-M5M-0.9 (PISCO, special part)

4.5.3 Connection

Do not supply air to the air device directly from the compressor. Make sure to supply compressed air through a main line air filter.

Attach the fixed diaphragm to the scale side.

■ When supplying air to linear scales with 2 axes:

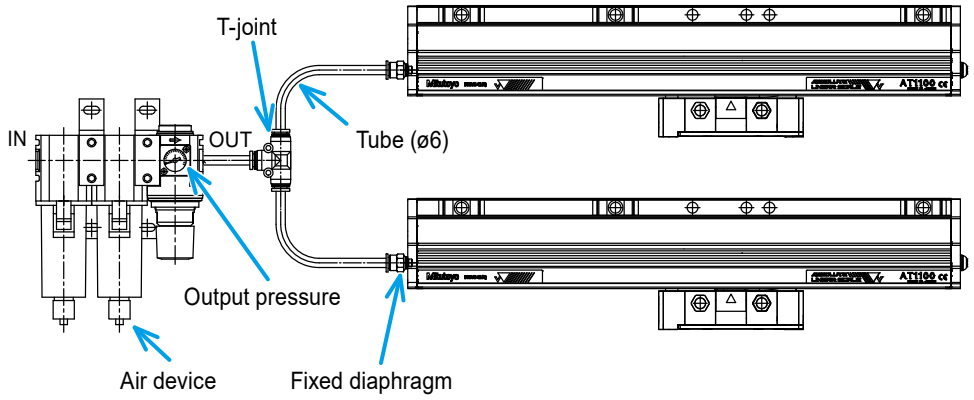

■ When supplying air to linear scales with 3 axes:

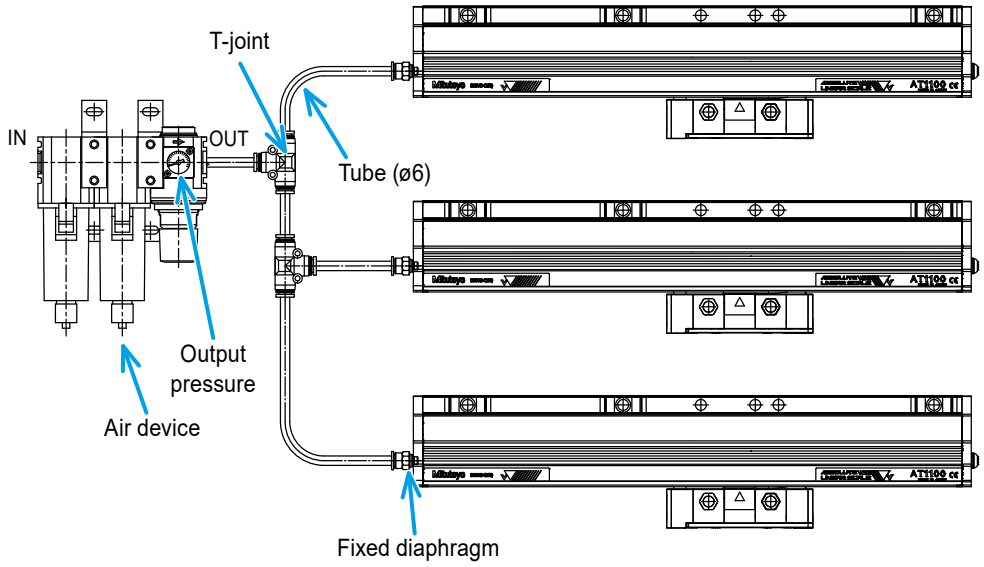

Tips

- Five scales (five axes) at maximum can be connected to one air device.
- Use a ø6 air tube.

(*1) Each filter element should be replaced after a year.
The time of replacement differs according to the operating conditions.

(*2) For information on maintenance, refer to the manual supplied with the air device.

4.6 External View and Dimensional Drawings of the Scale Main Unit

4.6.1 External View and Dimensional Drawings

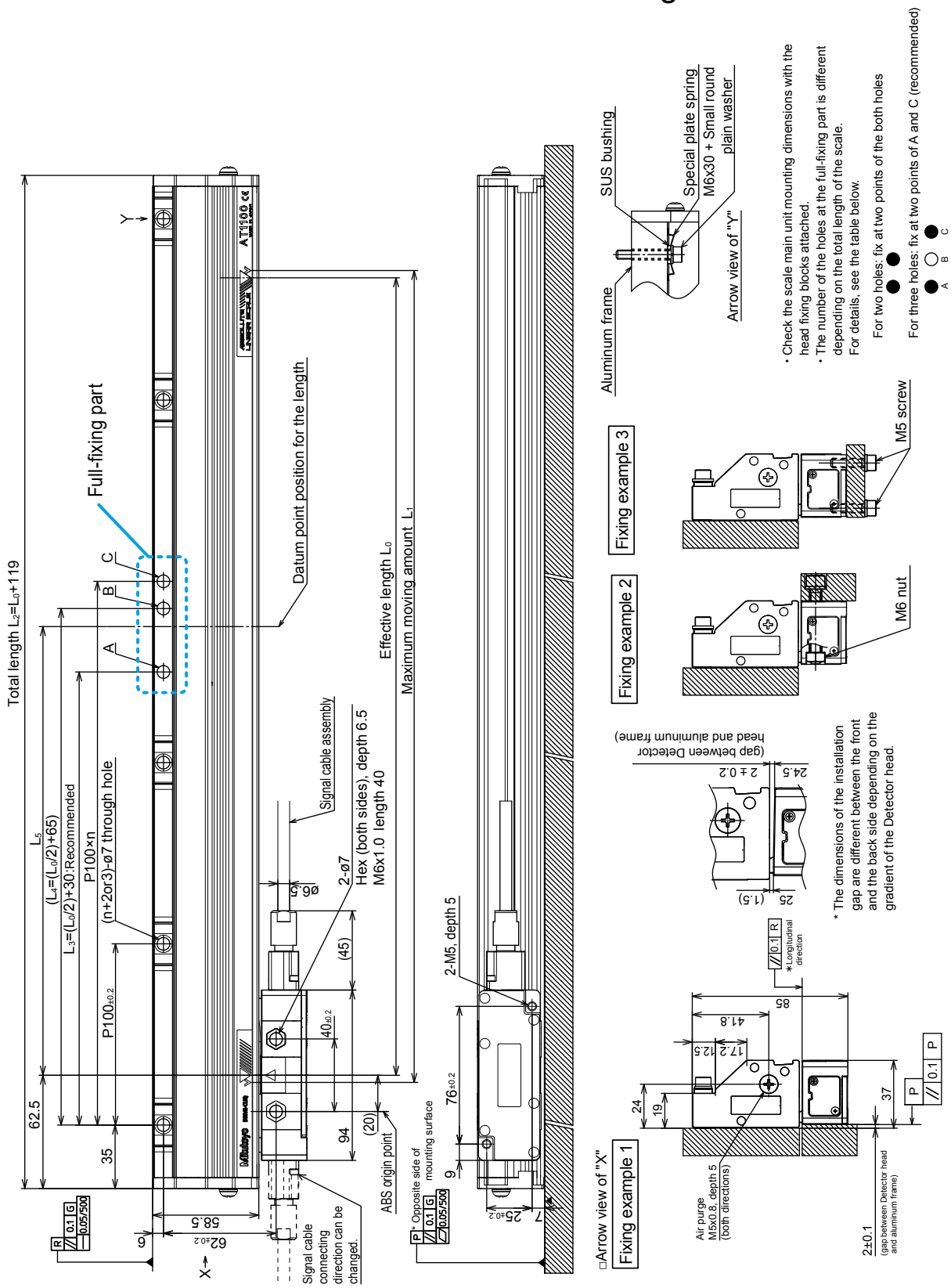

Tips

- G represents the machine guide.
- P represents the opposite side of the aluminum frame mounting surface. Also, S represents the opposite side of the detector head mounting surface.
- Q and R represent the linear scale's reference surfaces for mounting.
- For descriptions L_0 to L_5 in the figure, refer to the next page.
- The full-fixing parts are recommended to be fixed at two points, A and C.
- A can be identical to the position C depending on the unit's effective length.
  In this case, it is recommended to fix at two points, A and B.
- The number of the holes at the full-fixing part is different depending on the total length of the scale.
  For details, refer to "4.6.2 Dimensional Table" on page 40.

In the cases of 2 holes: Fix at 2 points of the both holes

In the cases of 3 holes: Fix at 2 points of A and C (recommended)

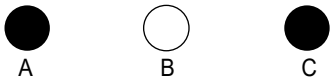

4.6.2 Dimensional Table

Unit: mm

Code No.	Model	Effective length L_0	Maximum travel distance L_1	Scale total length L_2	Fixing pitch			Scale fixing hole n (pcs.)	Number of holes on the full-fixing part
					L_3	L_4	L_5		
559-100-23	AT1123-140	140	148	259	100	135	90	2	2
559-101-23	AT1123-240	240	248	359	150	185	147.5	3	3
559-102-23	AT1123-340	340	348	459	200	235	190	4	2
559-103-23	AT1123-440	440	448	559	250	285	247.5	5	3
559-104-23	AT1123-540	540	548	659	300	335	290	6	2
559-105-23	AT1123-640	640	648	759	350	385	347.5	7	3
559-106-23	AT1123-740	740	748	859	400	435	390	8	2
559-107-23	AT1123-840	840	848	959	450	485	447.5	9	3
559-108-23	AT1123-940	940	948	1059	500	535	490	10	2
559-109-23	AT1123-1040	1040	1048	1159	550	585	547.5	11	3
559-110-23	AT1123-1140	1140	1148	1259	600	635	590	12	2
559-111-23	AT1123-1240	1240	1248	1359	650	685	647.5	13	3
559-112-23	AT1123-1340	1340	1348	1459	700	735	690	14	2
559-113-23	AT1123-1440	1440	1448	1559	750	785	747.5	15	3
559-114-23	AT1123-1540	1540	1548	1659	800	835	790	16	2
559-115-23	AT1123-1640	1640	1648	1759	850	885	847.5	17	3
559-116-23	AT1123-1740	1740	1748	1859	900	935	890	18	2
559-117-23	AT1123-1840	1840	1848	1959	950	985	947.5	19	3
559-118-23	AT1123-2040	2040	2048	2159	1050	1085	1047.5	21	3
559-119-23	AT1123-2240	2240	2248	2359	1150	1185	1147.5	23	3
559-120-23	AT1123-2440	2440	2448	2559	1250	1285	1247.5	25	3
559-121-23	AT1123-2640	2640	2648	2759	1350	1385	1347.5	27	3
559-122-23	AT1123-2840	2840	2848	2959	1450	1485	1447.5	29	3
559-123-23	AT1123-3040	3040	3048	3159	1550	1585	1547.5	31	3

5 Troubleshooting

This chapter describes how to check for the reasons why problems occur when initially powering on, or for when alarms are generated during operation.

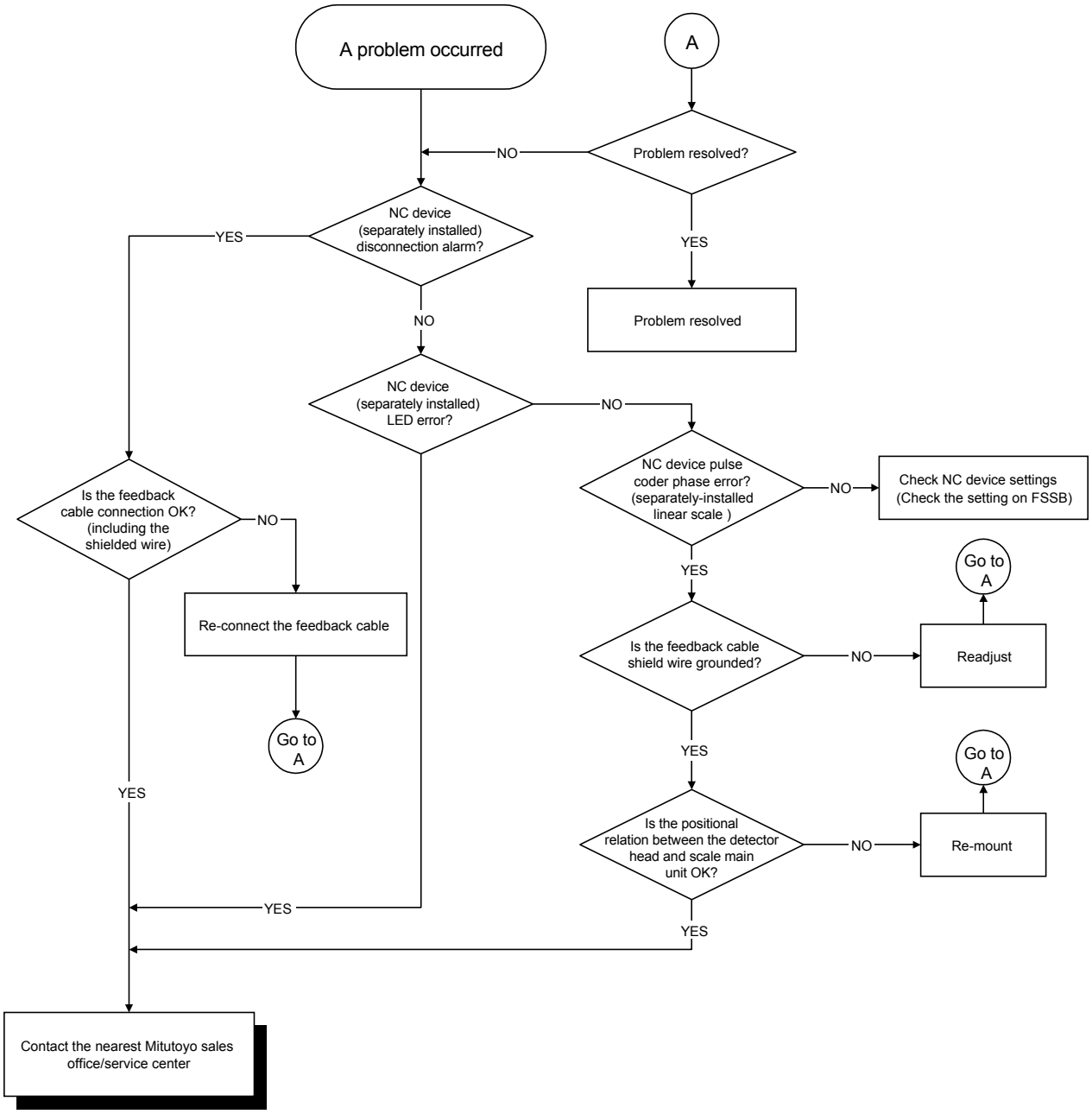

Tips

We provide software which makes it possible for the user to initially judge failure/error of this product. For details, contact a Mitutoyo sales office/service center.

MEMO

6 Appendix

6.1 Quantity of the Supplied Accessories for Mounting

Part No.	197727	06AFL049	06AFL090	06AFL050	06AFL843
Effective length	Hex socket head cap screw M6 x 40 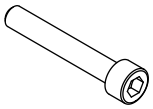	Hex socket head cap screw M6 x 30 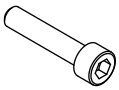	Internal teeth shake proof washer 6.6 x 10.2 x 0.5 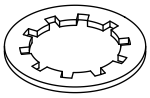	Small round plane washer, nominal 6 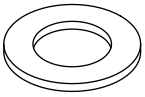	Frame holding spring 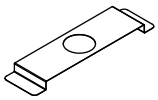
140	2	11	2	9	6
240	2	11	2	9	6
340	2	11	2	9	6
440	2	11	2	9	6
540	2	11	2	9	11
640	2	11	2	9	11
740	2	11	2	9	11
840	2	11	2	9	11
940	2	18	2	16	11
1040	2	18	2	16	11
1140	2	18	2	16	16
1240	2	18	2	16	16
1340	2	18	2	16	16
1440	2	18	2	16	16
1540	2	18	2	16	16
1640	2	25	2	23	21
1740	2	25	2	23	21
1840	2	25	2	23	21
2040	2	25	2	23	21
2240	2	25	2	23	27
2440	2	33	2	31	27
2640	2	33	2	31	27
2840	2	33	2	31	31
3040	2	33	2	31	31

MEMO

SERVICE NETWORK

*As of February 2021

Europe

Mitutoyo Europe GmbH
Borsigstrasse 8-10, 41469 Neuss, GERMANY
TEL: 49 (0)2137 102-0 FAX: 49 (0)2137 102-351

Mitutoyo CTL Germany GmbH
Von-Gunzert-Strasse 17, 78727 Oberndorf, GERMANY
TEL: 49 (0)7423 8776-0 FAX: 49 (0)7423 8776-99

KOMEG Industrielle Messtechnik GmbH
Zum Wasserwerk 3, 66333 Völklingen, GERMANY
TEL: 49 (0)6898 91110 FAX: 49 (0)6898 9111100

Germany

Mitutoyo Deutschland GmbH
Borsigstrasse 8-10, 41469 Neuss, GERMANY
TEL: 49 (0)2137 102-0 FAX: 49 (0)2137 86 85

M³ Solution Center Hamburg
Tempowerkring 9·im HIT-Technologiepark 21079 Hamburg, GERMANY
TEL: 49 (0)40 791894-0 FAX: 49 (0)40 791894-50

M³ Solution Center Berlin
Ernst-Lau-Straße 6, 12489 Berlin, GERMANY
TEL:49(0)30 2611 267 FAX: 49 30 67988729

M³ Solution Center Eisenach
Neue Wiese 4, 99817 Eisenach,GERMANY
TEL: 49 (0)3691 88909-0 FAX: 49 (0)3691 88909-9

M³ Solution Center Ingolstadt
Marie-Curie-Strasse 1A, 85055 Ingolstadt, GERMANY
TEL: 49 (0)841 954920 FAX: 49 (0)841 9549250

M³ Solution Center Leonberg
Steinbeisstrasse 2, 71229 Leonberg, GERMANY
TEL: 49 (0)7152 6080-0 FAX: 49 (0)7152 608060

Mitutoyo-Messgeräte Leonberg GmbH
Heidenheimer Strasse 14, 71229 Leonberg, GERMANY
TEL: 49 (0)7152 9237-0 FAX: 49 (0)7152 9237-29

U.K.

Mitutoyo (UK) Ltd.
Joule Road, West Point Business Park,
Andover, Hampshire SP10 3UX, UNITED KINGDOM
TEL: 44 (0)1264 353 123 FAX: 44 (0)1264 354883

M³ Solution Center Coventry
Unit6, Banner Park, Wickmans Drive, Coventry, Warwickshire CV4 9XA, UNITED KINGDOM
TEL: 44 (0)2476 426300 FAX: 44 (0)2476 426339

M³ Solution Center Halifax
Lowfields Business Park, Navigation Close, Elland, West Yorkshire HX5 9HB, UNITED KINGDOM
TEL: 44 (0)1422 375566 FAX: 44 (0)1422 328025

M³ Solution Center East Kilbride
The Baird Building, Rankine Avenue, Scottish Enterprise Technology Park, East Killbride G75 0QF, UNITED KINGDOM
TEL: 44 (0)1355 581170 FAX: 44 (0)1355 581171

France

Mitutoyo France
Paris Nord 2-123 rue de la Belle Etoile, BP 59267 ROISSY EN FRANCE 95957 ROISSY CDG CEDEX, FRANCE
TEL: 33 (0)149 38 35 00

M³ Solution Center LYON
Parc Mail 523, cours du 3ème millénaire, 69791 Saint-Priest, FRANCE
TEL: 33 (0)149 38 35 70

M³ Solution Center STRASBOURG
Parc de la porte Sud, Rue du pont du péage, 67118 Geispolsheim, FRANCE
TEL: 33 (0)149 38 35 80

M³ Solution Center CLUSES
Espace Scionzier 480 Avenue des Lacs, 74950 Scionzier, FRANCE
TEL: 33 (0)1 49 38 35 90

M³ Solution Center TOULOUSE
Aeroparc Saint Martin Cellule B08 ZAC de Saint Martin du Touch 12 rue de Caulet 31300 Toulouse, FRANCE
TEL: 33 (0)1 49 38 42 90

M³ Solution Center RENNES
2, rue Claude Chappe, PA le Vallon - ZAC Mivoie, 35230 Noyal-Châtillon-sur-Seiche, FRANCE
TEL: 33 (0)1 49 38 42 10

Italy

MITUTOYO ITALIANA S.r.l.
Corso Europa, 7 - 20045 Lainate (MI), ITALY
TEL: 39 02 935781 FAX: 39 02 93578255

M³ Solution Center BOLOGNA
Via dei Carpini1/A - 40011 Anzola Emilia (BO), ITALY
TEL: 39 02 93578215 FAX: 39 02 93578255

M³ Solution Center CHIETI
Contrada Santa Calcagna - 66020 Rocca S. Giovanni (CH), ITALY
TEL: 39 02 93578280 FAX: 39 02 93578255

M³ Solution Center PADOVA
Via G. Galilei 21/F - 35035 Mestrino (PD), ITALY
TEL: 39 02 93578268 FAX: 39 02 93578255

Netherlands

Mitutoyo Nederland B.V.
Wiltonstraat 25, 3905 KW Veenendaal, THE NETHERLANDS
TEL: 31(0)318-534911

Mitutoyo Nederland B.V. / M³ Solution Center Enschede
Institutenweg 50, 7521 PK Enschede, THE NETHERLANDS
TEL: 31(0)318-534911

Mitutoyo Nederland B.V. / M³ Solution Center Eindhoven
De Run 1115, 5503 LB Veldhoven, THE NETHERLANDS
TEL: 31(0)318-534911

Mitutoyo Research Center Europe B.V.
De Rijn 18, 5684 PJ Best, THE NETHERLANDS
TEL:31(0)499-320200 FAX:31(0)499-320299

Belgium

Mitutoyo Belgium N.V. / M³ Solution Center Melsele
Schaarbeekstraat 20, B-9120 Melsele, BELGIUM
TEL: 32 (0)3-2540444

Sweden

Mitutoyo Scandinavia AB
Släntvägen 6, 194 61 Upplands Väsby, SWEDEN
TEL: 46 (0)8 594 109 50 FAX: 46 (0)8 590 924 10

M³ Solution Center Alingsås
Ängsvaktaregatan 3A, 441 38 Alingsås, SWEDEN
TEL: 46 (0)8 594 109 50 FAX:46 (0)322 63 31 62

M³ Solution Center Värnamo
Storgatsbacken 1, 331 30 Värnamo, SWEDEN
TEL: 46 (0)8 594 109 50 FAX: 46 (0)370 463 34

Switzerland

Mitutoyo (Schweiz) AG
Steinackerstrasse 35, 8902 Urdorf, SWITZERLAND
TEL: 41 (0)447361150 FAX: 41(0)447361151

Mitutoyo (Suisse) SA
Rue Galilée 4, 1400 Yverdon-les Bains, SWITZERLAND
TEL: 41 (0)244259422 FAX: 41 (0)447361151

Poland

Mitutoyo Polska Sp.z o.o.
Ul.Graniczna 8A, 54-610 Wroclaw, POLAND
TEL: 48 (0)71354 83 50 FAX: 48 (0)71354 83 55

Czech Republic

Mitutoyo Česko s.r.o.
Dubská 1626, 415 01 Teplice, CZECH REPUBLIC
TEL: 420 417-514-011 FAX: 420 417-579-867

Mitutoyo Česko s.r.o. M³ Solution Center Ivančice
Ke Karlovu 62/10, 664 91 Ivančice, CZECH REPUBLIC
TEL: 420 417-514-011 FAX: 420 417-579-867

Mitutoyo Česko s.r.o. M³ Solution Center Ostrava Mošnov
Mošnov 314, 742 51 Mošnov, CZECH REPUBLIC
TEL: 420 417-514-050 FAX:420 417-579-867

Mitutoyo Česko s.r.o. Slovakia Branch
Hviezdoslavova 124, 017 01 Považská Bystrica, SLOVAKIA
TEL: 421 948-595-590

Hungary

Mitutoyo Hungária Kft.
Záhony utca 7, D-épület / fsz, 1031 Budapest, HUNGARY
TEL: 36 (0)1 2141447 FAX: 36 (0)1 2141448

Romania

Mitutoyo Romania SRL
1A Drumul Garii Odai Street, showroom, Ground Floor, 075100 OTOPENI-ILFOV, ROMANIA
TEL: 40 (0)311012088 FAX: +40 (0)311012089

Showroom in Brasov
Strada Ionescu Crum Nr.1, Brasov Business Park Turnul 1, Mezanin, 500446 Brasov-Judetul Brasov, ROMANIA
TEL/FAX: 40 (0)371020017

Russian Federation

Mitutoyo RUS LLC

13 Sharikopodshipnikovskaya, bld.2,
115088 Moscow, RUSSIAN FEDERATION

TEL: 7 495 7450 752

Finland

Mitutoyo Scandinavia AB Finnish Branch

Viherkiitäjä 2A, 33960, Pirkkala, FINLAND

TEL: 358 (0)40 355 8498

Austria

Mitutoyo Austria GmbH

Salzburger Straße 260 / 3 A-4600 Wels, AUSTRIA

TEL: 43 (0)7242 219 998

Mitutoyo Austria GmbH Goetzis Regional showroom

Lastenstrasse 48a 6840 Götzis AUSTRIA

Singapore

Mitutoyo Asia Pacific Pte. Ltd.

Head office / M³ Solution Center

24 Kallang Avenue, Mitutoyo Building,
SINGAPORE 339415

TEL:(65)62942211 FAX:(65)62996666

Malaysia

Mitutoyo (Malaysia) Sdn. Bhd.

Kuala Lumpur Head Office / M³ Solution Center

Mah Sing Integrated Industrial Park, 4, Jalan Utarid U5/14,
Section U5, 40150 Shah Alam, Selangor, MALAYSIA

TEL:(60)3-78459318 FAX:(60)3-78459346

Penang Branch office / M³ Solution Center

30, Persiaran Mahsuri 1/2, Sunway Tunas, 11900
Bayan Lepas, Penang, MALAYSIA

TEL:(60)4-6411998 FAX:(60)4-6412998

Johor Branch office / M³ Solution Center

70 (Ground Floor), Jalan Molek 1/28, Taman
Molek, 81100 Johor Bahru, Johor, MALAYSIA

TEL:(60)7-3521626 FAX:(60)7-3521628

Thailand

Mitutoyo(Thailand)Co., Ltd.

Bangkok Head Office / M³ Solution Center

76/3-5, Chaengwattana Road, Kwaeng Anusaowaree,
Khet Bangkaen, Bangkok 10220, THAILAND

TEL:(66)2080 3500 FAX:(66)2521 6136

Chonburi Branch / M³ Solution Center

7/1, Moo 3, Tambon Bowin, Amphur Sriracha,
Chonburi 20230, THAILAND

TEL:(66)2080 3563 FAX:(66)3834 5788

ACC Branch / M³ Solution Center

122/8, 122/9, Moo 6, Tambon Donhuaroh, Amphur
Muangchonburi, Chonburi 20000, THAILAND

TEL:(66)2080 3565

Indonesia

PT. Mitutoyo Indonesia

Head Office / M³ Solution Center

Jalan Sriwijaya No.26 Desa cibatu Kec. Cikarang
Selatan Kab. Bekasi 17530, INDONESIA

TEL: (62)21-2962 8600 FAX: (62)21-2962 8604

Vietnam

Mitutoyo Vietnam Co., Ltd

Hanoi Head Office / M³ Solution Center

1st & 2nd floor, MHDI Building, No. 60 Hoang Quoc
Viet Road, Nghia Do Ward, Cau Giay District, Hanoi,
VIETNAM

TEL:(84)24-3768-8963 FAX:(84)24-3768-8960

Ho Chi Minh City Branch Office / M³ Solution Center

123 Dien Bien Phu Street,Ward 15,Binh Thanh
District, Ho Chi Minh City, VIETNAM

TEL:(84)28-3840-3489 FAX:(84)28-3840-3498

Philippines

Mitutoyo Philippines, Inc.

Head Office / M³ Solution Center

Unit 1B & 2B LTI, Administration Building 1, Annex 1, North
Main Avenue, Laguna Technopark, Binan Laguna 4024,
PHILIPPINES

TEL:(63)49 544 0272 FAX:(63)49 544 0272

India

Mitutoyo South Asia Pvt. Ltd. Head Office

C-122, Okhla Industrial Area, Phase-I,
New Delhi-110 020, INDIA

TEL:(91) 11-26372090 FAX: (91) 11-26372636

MSA Technical Center

Plot no. 65, Ground Floor, Udyog Vihar, Phase-4 Gurga-
on, Haryana - 122016, INDIA

TEL : (91) 124–2340286/287

Mumbai Region Head office

303, Sentinel Hiranandani Business Park Powai,
Mumbai-400 076, INDIA

TEL:(91) 22-25700684/837/839 FAX: (91) 22-25700685

Pune Office / M³ Solution Center

G4/G5, Pride Kumar Senate, Off. Senapati Bapat
Road, Pune-411 016, INDIA

TEL:(91) 20-25660043/44/45 FAX: (91) 20-66033644

Bengaluru Region Head office / M³ Solution Center

No. 5, 100 Ft. Road, 17th Main, Koramangala, 4th Block, Bengaluru-560 034, INDIA

TEL:(91) 80-25630946/47/48 FAX: (91) 80-25630949

Chennai Office / M³ Solution Center

No. 624, Anna Salai Teynampet, Chennai-600 018, INDIA

TEL: (91) 44-24328823/24
FAX: (91) 44-24328825

Kolkata Office

Unit No. 1208,Om Tower, 32,J.L..Nehru Road, Kolkata-700 071, INDIA

Tel: 91 33-22267088/40060635 Fax: (91) 33-22266817

Ahmedabad Office/M³ Solution Center (Ahmedabad)

A-104 & A-105, First Floor, Solitaire Corporate Park, Near Divya Bhaskar Press, S.G. Road, Ahmedabad - 380 015, INDIA

TEL: (91) 079 - 29704902/903

Coimbatore Office

Regus, Srivari Srimath, 3rd Floor, Door No:1045, Avinashi Road, Coimbatore - 641 018,INDIA

TEL: (91) 9345005663

Taiwan

Mitutoyo Taiwan Co., Ltd. / M³ Solution Center Taipei

4F., No.71, Zhouzi St., Neihu Dist.,Taipei City 114, TAIWAN (R.O.C.)

TEL:886(2)5573-5900 FAX:886(2)8752-3267

Taichung Branch / M³ Solution Center Taichung

1F., No. 299, Gaotie 1st Rd., Wuri Dist., Taichung City 414, TAIWAN (R.O.C.)

TEL:886(4)2338-6822 FAX:886(4)2338-6722

Kaohsiung Branch / M³ Solution Center Kaohsiung

1F., No.31-1, Haibian Rd., Lingya Dist., Kaohsiung City 802, TAIWAN (R.O.C.)

TEL:886(7)334-6168 FAX:886(7)334-6160

South Korea

Mitutoyo Korea Corporation

Head Office / M³ Solution Center

(Sanbon-Dong, Geumjeong High View Build.), 6F, 153-8, Ls-Ro, Gunpo-Si, Gyeonggi-Do, 15808 KOREA

TEL:82(31)361-4200 FAX:82(31)361-4201

Busan Office / M³ Solution Center

(3150-3, Daejeo 2-dong) 8,Yutongdanji 1-ro 49beon-gil, Gangseo-gu, Busan, 46721 KOREA

TEL:82(51)324-0103 FAX:82(51)324-0104

Daegu Office / M³ Solution Center

(Galsan-dong, Daegu Business Center), 301-Ho, 217, Seongseogongdan-ro, Dalseo-gu, Daegu 42704 KOREA

TEL:82(53)593-5602 FAX:82(53)593-5603

China

Mitutoyo Measuring Instruments (Shanghai) Co., Ltd.

8th Floor, Tower 1 Lujiazui Jinkong Square No.1788/1800 Century Ave., Pudong New District, Shanghai 200122, CHINA

TEL:86(21)5836-0718 FAX:86(21)5836-0717

Suzhou Office / M³ Solution Center (Suzhou)

No. 46 Baiyu Road, Suzhou 215021, CHINA

TEL:86(512)6522-1790 FAX:86(512)6251-3420

Wuhan Office / M³ Solution Corner

Room 1701, Wuhan Wanda Center, No. 96, Linjiang Road, Wuchang District, Wuhan Hubei 430060, CHINA

TEL:86(27)8544-8631 FAX:86(27)8544-6227

Chengdu Office

1-701, New Angle Plaza, 668# Jindong Road, Jinjiang District, Chengdu, Sichuan 610066,CHINA

TEL:86(28)8671-8936 FAX:86(28)8671-9086

Hangzhou Office

Room 804, Eastern International Business Center Building 1, No.600 Jinsha Road of

Hangzhou Economic and Technological Development Zone, 310018, CHINA

TEL: 86(571)8288-0319 FAX: 86(571)8288-0320

Tianjin Office / M³ Solution Center China (Tianjin)

Room D 12/F, TEDA Building, No.256 Jie-fang Nan Road Hexi District,Tianjin 300042, CHINA

TEL:86(22)5888-1700 FAX:86(22)5888-1701

Changchun Office

Room 815, 8F, Building A1, Upper East International No.3000 Dongsheng Street, Erdao District, Changchun, Jilin, 130031, CHINA

TEL:86(431)8192-6998 FAX:86(431)8192-6998

Chongqing Office

Room 1312, Building 3, Zhongyu Plaza, No.86, Hongjin Avenue,Longxi Street, Yubei District, Chongqing, 400000, CHINA

TEL:86(23)6595-9950 FAX:86(23)6595-9950

Qingdao Office

Room 638, 6F, No.192 Zhengyang Road, Chengyang District, Qingdao, Shandong, 266109, CHINA

TEL:86(532)8096-1936 FAX:86(532)8096-1937

Xi'an Office

Room 805, Xi'an International Trade Center, No. 196 Xiaozhai East Road, Xi'an, 710061, CHINA

TEL:86(29)8538-1380 FAX:86(29)8538-1381

Dalian Office / M³ Solution Center China (Dalian)

Room A-106 Shuijing SOHO, No.16 Harbin Road,Economic Development Zone,Dalian, 116600 CHINA

TEL:86(411)8718 1212 FAX:86(411)8754-7587

Zhengzhou Office

Room1801,18/F,Unit1,Building No.23, Shangwu Inner Ring Road, Zhengdong New District,Zhengzhou City, Henan 450018, CHINA

TEL:86(371)6097-6436 FAX:86(371)6097-6981

Dongguan Office / M³ Solution Center China (Dongguan)

Room 801, No 65, Chang'an Section Guanchang Road, Chang'an Town, Dongguan City, Guangdong 523841, CHINA

TEL:86(769)8541 7715 FAX:86(769)-8541 7745

Fuzhou Office

Room 2104, City Commercial Centre, No.129 Wu Yi Road N., Fuzhou City, Fujian 350005, CHINA

TEL 86 (591) 8761 8095
FAX 86 (591) 8761 8096

Changsha Office

Room 2207, Building 1, Shiner International Plaza, No. 88, Kaiyuan Middle Road, Changsha City, Hunan 410100, CHINA

TEL 86 (731) 8401 9276
FAX 86 (731) 8401 9376

Mitutoyo Leeport Metrology (Hong Kong) Limited

Room 818, 8/F, Vanta Industrial Centre, No.21-33, Tai Lin Pai Road, Kwai Chung, NT, HONG KONG

TEL:(852)2992-2088 FAX:(852)2670-2488

Mitutoyo Measuring Instruments (Suzhou) Co., Ltd.

No. 46 Baiyu Road, Suzhou 215021, CHINA

TEL:86(512)6252-2660 FAX:86(512)6252-2580

U.S.A.

Mitutoyo America Corporation

965 Corporate Blvd., Aurora, IL 60502, U.S.A.

TEL:1-(630)820-9666 Toll Free No. 1-888-648-8869

FAX:1-(630)978-3501

M³ Solution Center-Illinois

965 Corporate Blvd., Aurora, IL 60502, U.S.A.

M³ Solution Center-Ohio

6220 Hi-Tek Ct., Mason, OH 45040, U.S.A.

TEL:1-(888)-648-8869 FAX:1-(513)754-0718

M³ Solution Center-Michigan

46850 Magellan Drive, Suite 100 Novi, MI 48377, U.S.A.

TEL:1-(888)-648-8869 FAX: 1-(248)-926-0928

M³ Solution Center-California

16925 E. Gale Ave., City of Industry, CA 91745, U.S.A.

TEL:1-(888)-648-8869 FAX:1-(626)369-3352

M³ Solution Center-North Carolina

11515 Vanstory Dr., Suite 140, Huntersville, NC 28078, U.S.A.

TEL:1-(888)-648-8869 FAX:1-(704)875-9273

M³ Solution Center-Alabama

2100 Riverchase Center Suite 106, Birmingharm, AL 35244, U.S.A

TEL:1-(888)-648-8869 FAX:1-(205)-988-3423

M³ Solution Center-Washington

1000 SW 34th St. Suite G, Renton, WA 98057 U.S.A.

TEL:1-(888)-648-8869

M³ Solution Center-Texas

4560 Kendrick Plaza Drive Suite 120 Houston, TX 77032, U.S.A.

TEL:1-(888)-648-8869 FAX:1-(281)227-0937

M³ Solution Center-Massachusetts

753 Forest Street, Suite 110, Marlborough, MA 01752, U.S.A.

TEL:1-(888)648-8869 FAX:1-(508)485-0782

Mitutoyo America Corporation Calibration Lab

965 Corporate Blvd., Aurora, IL 60502, U.S.A.

TEL:1-(888)-648-8869 FAX:1-(630)978-6477

Mitutoyo Research & Development America, Inc.

11533 NE 118th St., Kirkland, WA 98034-7111, U.S.A.

TEL:1-(425)821-3906 FAX:1-(425)821-3228

Mitutoyo Research & Development America, Inc. - California Office

16925 Gale Ave. City of Industry, CA 91745-1806 U.S.A.

TEL: 1-(425)821-3906 FAX: 1-(425)821-3228

Mituotyo America Corporation CT-Lab Chicago

965 Corporate Blvd., Aurora, IL 60502, U.S.A.

TEL: 1-(888)-648-8869 FAX: 1-(630)-820-3418

Canada

Mitutoyo Canada Inc.

2121 Meadowvale Blvd., Mississauga,
Ont. L5N 5N1., CANADA

TEL:1-(905)821-1261 FAX:1-(905)821-4968

Montreal Office

7075 Place Robert-Joncas Suite 129, Montreal,
Quebec H4M 2Z2, CANADA

TEL:1-(514)337-5994 FAX:1-(514)337-4498

Brazil

Mitutoyo Sul Americana Ltda.

Head office / M³ Solution Center

Rodovia Índio Tibiriçá 1555, CEP 08655-000 -
Vila Sol Nascente - Suzano - SP - BRASIL

TEL:55 (11)5643-0040

Argentina

Mitutoyo Sul Americana Ltda.

Argentina Branch / M³ Solution Center

Av. B. Mitre 891/899 – C.P. (B1603CQI)
Vicente López –Pcia. Buenos Aires – ARGENTINA

TEL:54(11)4730-1433 FAX:54(11)4730-1411

Sucursal Cordoba / M³ Solution Center

Av. Amadeo Sabattini, 1296, esq. Madrid Bº
Crisol Sur – CP 5000, Cordoba, ARGENTINA

TEL/FAX:54 (351) 456-6251

Mexico

Mitutoyo Mexicana, S.A. de C.V.

Industria Elēctrica No.15, Parque Industrial, Naucalpan de Juārez, Estado de Mēxico C.P.53370,
MÉXICO

TEL: 52 (01-55) 5312-5612
FAX: 52 (01-55) 5312-3380

Monterrey Office / M³ Solution Center

Blv. Interamericana No. 103, Parque Industrial
FINSA, C.P. 66636 Apodaca, N.L., MÉXICO

TEL: 52(01-81) 8398-8227/8228/8242/8244

FAX: 52(01-81) 8398-8226

Tijuana Office / M³ Solution Center

Calle José María Velazco 10501-C, Col. Cd. Industrial
Nueva Tijuana, C.P. 22500 Tijuana, B.C., MÉXICO

TEL: 52 (01-664) 647-5024

Querétaro Office / M³ Solution Center

Av. Cerro Blanco No.500-1, Colonia Centro Sur,
Querétaro, Querétaro, C.P. 76090, MÉXICO

TEL: 52 (01-442) 340-8018, 340-8019 and 340-8020
FAX: 52 (01-442) 340-8017

Mitutoyo Mexicana, S.A. de C.V. Querétaro Calibration Laboratory

Av. Cerro Blanco 500 30 Centro Sur,
Querétaro, Querétaro, C.P. 76090, MÉXICO

TEL: 52 (01-442) 340-8018, 340-8019 and 340-8020
FAX: 52 (01-442) 340-8017

Aguascalientes Office / M³ Solution Center

Av. Aguascalientes No. 622, Local 15 Centro Comercial El Cilindro Fracc. Pulgas Pandas Norte, C.P.
20138, Aguascalientes, Ags. MÉXICO

TEL: 52 (01-449) 174-4140 and 174-4143

Irapuato Office / M³ Solution Center

Boulevard a Villas de Irapuato No. 1460 L.1 Col. Ejido

Irapuato C.P. 36643

Irapuato, Gto., MÉXICO

TEL: 52 (01-462) 144-1200 and 144-1400

Revision Record

Date of publication	Revision status	Details of revision
August 1, 2017	First edition	Publication
November 1, 2018	Revision first edition	Revision according to increase / decrease of model
January 1, 2021	Revision second edition	Revision due to changes of the harmonized European standards, etc.
July 1, 2021	Revision third edition	Additions and changes due to application of the UKCA (UK Conformity Assessed) marking, etc.

Mitutoyo Corporation

20-1, Sakado 1-Chome, Takatsu-ku, Kawasaki-shi, Kanagawa 213-8533, Japan
Tel: +81 (0)44 813-8230 Fax: +81 (0)44 813-8231
Home page: https://www.mitutoyo.co.jp/global.html

For the EU Directive, Authorized representative and importer in the EU:
Mitutoyo Europe GmbH
Borsigstrasse 8-10, 41469 Neuss, Germany

For the UK Regulation, Authorized representative and importer in the UK:
Mitutoyo (UK) Ltd.
Joule Road, West Point Business Park, Andover, Hampshire SP10 3UX, UNITED KINGDOM

Printed in Japan

No. 99MBE095B