Mitutoyo

# EJ Counter Compact Display Unit For Linear Gage

## EJ-102N
## EJ-102NE

# User's Manual

## - Instructions for use -

Read this document thoroughly before operating the product. After reading, retain it close at hand for future reference.
This English language version of the document contains the original instructions.

● For the related User's Manuals, see "■ Positioning of this document, document map" on page 1.

No. 99MBC139A3
Date of publication: July 1, 2025

## ■ Product names and model numbers covered in this document

| Product name | Model No. |
|---|---|
| EJ Counter<br>Compact Display Unit For Linear Gage | EJ-102N<br>EJ-102NE |

## ■ Notice regarding this document

- Mitutoyo Corporation assumes no responsibilities for any damage to the product, caused by its use not conforming to the procedure described in this document.
- In the event of loss or damage to this document, immediately contact the agent where you purchased the product or a Mitutoyo sales office.
- Read this document thoroughly before operating the product. In particular, be sure to fully understand "Safety Precautions" on page 5 and "Precautions for Use" on page 5.
- The contents of this document are based on information current as of July 2025.
- No part or whole of this document may be transmitted or reproduced by any means without prior written permission of Mitutoyo Corporation.
- Some screen displays in this document may be highlighted, simplified or partially omitted for convenience of explanation. In addition, some of them may differ from actual ones to the extent that no user will misunderstand the functions and operations.
- The corporation, organization and product names that appear in this document are their trademarks or registered trademarks.

©2020-2025 Mitutoyo Corporation. All rights reserved.

# Contents

**Contents** ..... i

**About This Document** ..... 1

**Conventions Used in This Document** ..... 2

**Safety Precautions** ..... 5

**Precautions for Use** ..... 5

**Electromagnetic Compatibility (EMC)** ..... 7

**Export Control Compliance** ..... 7

**Notes on Export to European Countries** ..... 7

**Disposal of Products outside the European Countries** ..... 7

**Disposal of Old Electrical & Electronic Equipment (Applicable in the European Countries with Separate Collection Systems)** ..... 8

**China RoHS Compliance Information** ..... 8

**Warranty** ..... 9

**Disclaimer** ..... 9

**1 Overview** ..... 11

1.1 Main Functions and Features ..... 12

1.2 System Configuration ..... 13

1.3 Supported Linear Gages ..... 14

1.4 Part Names ..... 16

1.4.1 Main Unit ..... 16

1.4.2 Display ..... 17

1.5 Standard Accessories ..... 18

1.6 Operation Flow ..... 19

**2 Setup** ..... 21

2.1 Mounting ..... 22

2.1.1 DIN Rail Attachment / Removal ..... 22

2.1.2 Linking Multiple EJ Counters ..... 23

2.1.3 Attaching the DIN Rail Fixing Bracket ..... 24

2.2 Linear Gage Connection ..... 25

2.3 Power Supply Connection ..... 26

2.3.1 Ground Connection ..... 27

2.3.2 DC Power Supply Connection ..... 29
2.3.3 Connecting the AC Adapter (Optional) ..... 31

**3 Operation Procedure ..... 33**

3.1 Power ON/OFF ..... 34

3.2 Measurement Functions ..... 35

3.2.1 Switching the Display Channel (Ch.) ..... 35
3.2.2 Preset ..... 36
3.2.3 Peak Hold ..... 38
3.2.4 Tolerance Judgment ..... 39
3.2.5 Setting Preset/Tolerance Values ..... 40

3.3 Parameter Setting ..... 43

3.3.1 Setting Procedure ..... 43
3.3.2 List of Parameters ..... 45
3.3.3 Effect of Parameter Changes on the A-axis and B-axis ..... 51
3.3.4 Effect of Changing the Display Mode ..... 52

**4 Data Output ..... 53**

4.1 I/O Function ..... 54

4.1.1 Connector Plug ..... 54
4.1.2 Wiring Procedure ..... 54
4.1.3 Pin Assignments ..... 56
4.1.4 Input/Output Circuits ..... 58
4.1.5 Timing Chart ..... 59

4.2 Data Input/Output ..... 62

**5 Troubleshooting ..... 63**

5.1 Troubleshooting ..... 64

5.2 Error Messages ..... 66

5.2.1 Error State Indication ..... 66
5.2.2 How to Clear Errors ..... 66
5.2.3 Error List ..... 67

**6 Specifications ..... 69**

6.1 Basic Specifications ..... 70

6.2 Outline Dimensional Drawing ..... 71

6.3 Options ..... 73

**SERVICE NETWORK ..... App-1**

# About This Document

## ■ Positioning of this document, document map

The position of this document and its relationship to other product documentation are as follows.

### ● Counter manual

| | |
|---|---|
| EJ Counter<br>Quick Start Guide | Covers handling precautions, operating procedures, specifications and troubleshooting. This document is included in the product package together with the EJ Counter. |
| EJ Counter<br>User's Manual (This Document) | This is the User's Manual that explains the EJ Counter in detail. |

### ● Interface unit manual

| | |
|---|---|
| Interface Unit<br>Quick Start Guide | Explains setup, specifications and troubleshooting of the Interface Unit to which an EJ Counter is connected. For details, see the "Interface Unit User's Manual". This document is included in the product package together with the Interface Unit. |
| Interface Unit<br>USB<br>User's Manual | This is the User's Manual that explains the Interface Unit to which an EJ Counter is connected for use in detail.<br>Not included with product. Please download the manual from Mitutoyo's web site (https://manual.mitutoyo.co.jp). |
| Interface Unit<br>CC-Link<br>User's Manual | |
| Interface Unit<br>PROFINET<br>User's Manual | |
| Interface Unit<br>EtherNet/IP<br>User's Manual | |
| Interface Unit<br>EtherCAT<br>User's Manual | |

- Linear Gage manual

| | |
|---|---|
| LG100<br>User's Manual | Covers installation procedures, specifications, maintenance and so forth for Linear Gages that can be connected to EJ Counters.<br>Select and purchase Linear Gages according to your application. |
| LG200<br>User's Manual | |
| LGB<br>User's Manual | |

## ■ Intended readers and purpose of this document

- Intended readers

This document is intended for customers who are installing or using EJ Counters for the first time.

- Purpose

The purpose of this document is to help you understand the product overview, functions of each part, procedures for use and care of the product.

# Conventions Used in This Document

## ■ Safety reminder conventions warning against potential hazards

| | |
|---|---|
| ⚠CAUTION | Indicates a hazard with a low level of risk which, if not avoided, **could result in minor or moderate injury**. |
| NOTICE | Indicates a situation which, if not avoided, **may result in property damage**. |

## ■ Conventions indicating prohibited and mandatory actions

| | |
|---|---|
| | Indicates concrete information about prohibited actions. |
| | Indicates concrete information about mandatory actions. |
| | Indicates that grounding needs to be implemented. |

## ■ Conventions indicating referential information or reference location

| | |
|---|---|
| **IMPORTANT** | Indicates information that must be known when using the product. |
| **Tips** | Indicates further information and details relevant for the operating methods and procedures that are explained in that section. |
| | Indicates reference location if there is information that should be referred to in this document or an extraneous User's Manual.<br>Example: For details about XX, see "1.4 Part Names" on page 16. |

## ■ Other conventions

| | |
|---|---|
| **( ): Round brackets** | Represent a paraphrase of an immediately preceding phrase or a supplementary explanation. |
| **" ": Double quotation marks** | Represent a highlighted phrase. They also indicate an index where information to be referenced is described. |
| **[ ]: Square brackets** | Indicates the name of an operation key. |
| **1, 2, 3, ...** | Indicates the order and the contents of tasks. |
| **»** | Indicates the action resulted from some operation(s). |
| **A-axis**<br>**B-axis** | The Linear Gage connected to the Linear Gage INPUT A connector is referred to as the A-axis, and that connected to INPUT B connector as the B-axis. |

## ■ Example of conventions use

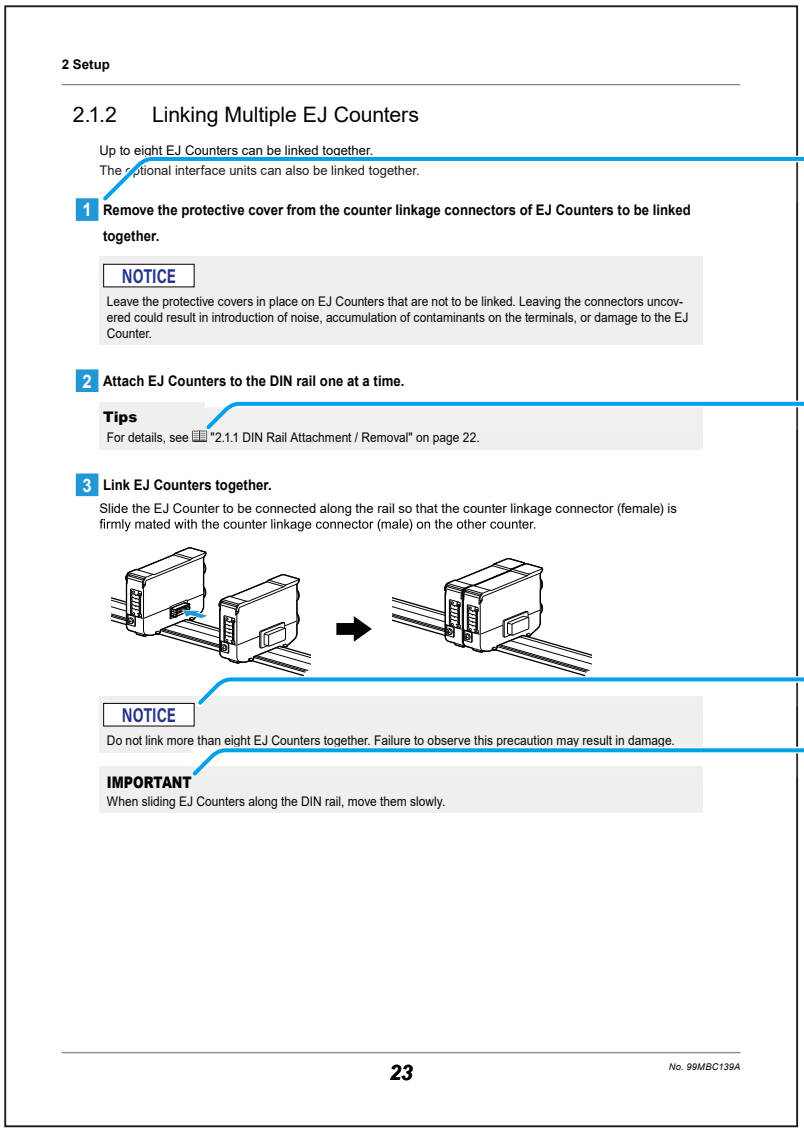

2 Setup

2.1.2 Linking Multiple EJ Counters

Up to eight EJ Counters can be linked together.
The optional interface units can also be linked together.

**1 Remove the protective cover from the counter linkage connectors of EJ Counters to be linked together.**

NOTICE
Leave the protective covers in place on EJ Counters that are not to be linked. Leaving the connectors uncovered could result in introduction of noise, accumulation of contaminants on the terminals, or damage to the EJ Counter.

**2 Attach EJ Counters to the DIN rail one at a time.**

**Tips**
For details, see "2.1.1 DIN Rail Attachment / Removal" on page 22.

**3 Link EJ Counters together.**

Slide the EJ Counter to be connected along the rail so that the counter linkage connector (female) is firmly mated with the counter linkage connector (male) on the other counter.

NOTICE
Do not link more than eight EJ Counters together. Failure to observe this precaution may result in damage.

**IMPORTANT**
When sliding EJ Counters along the DIN rail, move them slowly.

23

No. 99MBC139A

Indicates an operating procedure to be performed or its outline.

Indicates reference to some other document or section.

Indicates safety information.

Indicates important information that must be known when using the product.

# Safety Precautions

Read these "Safety Precautions" thoroughly before operating the product to use it properly.
These safety precautions include such information as to prevent injury to the operator and other persons, damage to property and product defects. Be sure to observe these precautions carefully.

## ■ Precautions for this product

**⚠CAUTION**

| | |
|---|---|
| 🚫 | Do not disassemble or modify this product. Otherwise you may be subject to electric shock, and there is a risk of fire due to a short circuit caused by metallic powders that have gotten inside the product. |

# Precautions for Use

## ■ Use and handling of the product

- Use this product only by connecting to measuring instruments which supports this product.

  Do not use this product for measuring instruments which does not support this product.
  For measuring instruments supported by this product, contact the agent where you purchased the product or a Mitutoyo sales office.

- This product is a measuring instrument.

  Do not use it for any purposes other than measuring.

- This product is for industrial usage.

  Do not use this product for purposes other than for industrial usage.

- The product is a precision instrument.

  Handle this product with care. Do not apply excessive shock or force to any of the parts during operation.

## Environment for placement

This product is designed for indoor use. To ensure that the product is used in a suitable environment, take the following conditions into account when installing it.

- Vibration
  Install this product in an environment where it will be subject to minimal vibration. Using this product in a place with significant vibration for an extended period of time may result in malfunction of the precision components.
- Dust
  Dust in the installation site negatively affects the electrical components. Install this product in an environment where it will be subject to minimal dust.
- Sunlight
  If this product is exposed to direct sunlight, the heat will cause deformations in the main unit, negatively affecting its operation. If installing this product in an environment that is exposed to direct sunlight, such as near a window, is unavoidable, protect it from the sunlight by curtaining it off, etc.
- Ambient temperature and humidity
  Avoid using the product in any place that is subject to sudden changes in temperature or humidity.

When using this product in the following environments, take necessary shielding measures.

- Where noise is generated due to static electricity, etc.
- Where there is strong electrical field intensity
- Where power wires and motor lines pass nearby
- Where there is risk of direct contact with materials such as chips, cutting fluids or water
- Where there is risk of exposure to radiation
- Where there is the risk of exposure to corrosive gas

## Maintenance

Do not use organic solvents such as thinner or benzine. Gently wipe dirt off of the product with a soft, tightly woven cloth.

## Power supply

- When using the optional AC adapter, do not connect it to any power supply that is also used to power equipment such as machine tools or large CNC measuring instruments.
- When using a commercial power supply, make sure that it is rated for 10 V–27 V and an output current of 3 A or greater. Make sure that the power cable used to connect this product to its power supply does not exceed 30 m in length, and use only a one-to-one connection between the product and the power supply.
- Do not use a DC power supply that is shared with other equipment that draws high power.
- Avoid outdoor wiring.
- Be sure to connect this product to ground.
- Connect the AC adapter to a grounded three-slot outlet.

# Electromagnetic Compatibility (EMC)

This product complies with the EMC Directive and the UK Electromagnetic Compatibility Regulations; however, if this receives electromagnetic interference that exceeds these requirements, it will be out of warranty and require appropriate measures.

This product is an industrial product, and is not intended to be used in residential environment. If this product is used in residential environment, this product may cause electromagnetic interference with other instruments. In such a case, it is required to take appropriate measures for preventing such electromagnetic interference.

# Export Control Compliance

This product falls into the Catch-All-Controlled Goods and/or Catch-All-Controlled Technologies (including Programs) under Category 16 of Appended Table 1 of Export Trade Control Order or under Category 16 of Appended Table of Foreign Exchange Control Order, based on Foreign Exchange and Foreign Trade Act of Japan.

If you intend re-export of the product from a country other than Japan, re-sale of the product in a country other than Japan, or re-providing of the technology (including Programs), you shall observe the regulations of your country.

Also, if an option is added or modified to add a function to this product, this product may fall under the category of List-Control Goods, List-Control Technology (including Programs) under Category 1 - 15 of Appended Table 1 of Export Trade Control Order or under Category 1 - 15 of Appended Table of Foreign Exchange Control Order, based on Foreign Exchange and Foreign Trade Act of Japan. In that case, if you intend re-export of the product from a country other than Japan, re-sale of the product in a country other than Japan, or re-providing of the technology (including Programs), you shall observe the regulations of your country. Please contact Mitutoyo in advance.

# Notes on Export to European Countries

When you intend exporting of this product to any of the European countries, it may be required to provide User's Manual(s) in English and Declaration of Conformity in English (in some cases, the official language of the country to be exported). For detailed information, please contact Mitutoyo in advance.

# Disposal of Products outside the European Countries

Please follow the official instruction in each community and country.

# Disposal of Old Electrical & Electronic Equipment (Applicable in the European Countries with Separate Collection Systems)

This symbol on the product or on its packaging is based on WEEE Directive (Directive on Waste Electrical and Electronic Equipment), and this symbol indicates that this product shall not be treated as household waste.

To reduce the environmental impact and minimize the volume of landfills, please cooperate in reuse and recycle.

For how to dispose of the product, please contact the agent where you purchased the product or a Mitutoyo sales office.

# China RoHS Compliance Information

This product meets China RoHS requirements. See the table below.

产品中有害物质的名称及含量

| 部件名称 | 有害物质 | | | | | |
|---|---|---|---|---|---|---|
| | 铅 | 汞 | 镉 | 六价铬 | 多溴联苯 | 多溴二苯醚 |
| | (Pb) | (Hg) | (Cd) | (Cr(VI)) | (PBB) | (PBDE) |
| 本体 | × | ○ | ○ | ○ | ○ | ○ |
| 配件 | ○ | ○ | ○ | ○ | ○ | ○ |

| 部件名称 | 有害物质 | | | |
|---|---|---|---|---|
| | 邻苯二甲酸二正丁酯 | 邻苯二甲酸二异丁酯 | 邻苯二甲酸丁基苄酯 | 邻苯二甲酸二(2-乙基已)酯 |
| | (DBP) | (DIBP) | (BBP) | (DEHP) |
| 本体 | ○ | ○ | ○ | ○ |
| 配件 | ○ | ○ | ○ | ○ |

本表格依据 SJ/T 11364 的规定编制。

○: 表示该有害物质在该部件所有均质材料中的含量均在 GB/T 26572 规定的限量要求以下。

×: 表示该有害物质至少在该部件的某一均质材料中的含量超出 GB/T 26572 规定的限量要求。

环保使用期限标识是根据《电器电子产品有害物质限制使用管理办法》以及《电器电子产品有害物质限制使用标识要求(SJ/T11364-2024)》制定的,适用于中国境内销售的电子电气产品的标识。

电器电子产品只要按照安全及使用说明内容在正常使用情况下,从生产日期算起,在此期限内产品中含有的有毒有害物质不致发生外泄或突变,不致对环境造成严重污染或对其人身、财产造成严重损害。

产品使用后,要废弃在环保使用年限内或者刚到年限的产品,请根据国家标准采取适当的方法进行处置。

另外,此期限不同于质量/功能的保证期限。

# Warranty

This product has been manufactured under strict quality management, but should it develop problems within one year of the date of purchase in normal use, repair shall be performed free of charge. Please contact the agent where you purchased the product or Mitutoyo sales representative (📖 "SERVICE NETWORK" on page App-1). This warranty, however, shall not affect any provisions of the Mitutoyo Software End User License Agreement.

If this product fails or is damaged for any of the following reasons, it will be subject to a repair charge, even if it is still under warranty.

- Failure or damage owing to fair wear and tear
- Failure or damage owing to inappropriate handling, maintenance or repair, or to unauthorized modification
- Failure or damage owing to transport, dropping, or relocation of the product after purchase
- Failure or damage owing to fire, salt, gas, abnormal voltage, lightning surge, or natural disaster
- Failure or damage owing to use in combination with hardware or software other than those designated or permitted by Mitutoyo
- Failure or damage owing to use in ultra-hazardous activities

This warranty is effective only where the product is properly installed and operated in conformance with the instructions in this document within the original country of the installation.

EXCEPT AS SPECIFIED IN THIS WARRANTY, ALL EXPRESS OR IMPLIED CONDITIONS, REPRESENTATIONS, AND WARRANTIES OF ANY NATURE WHATSOEVER INCLUDING, WITHOUT LIMITATION, ANY IMPLIED WARRANTY OF MERCHANTABILITY, FITNESS FOR A PARTICULAR PURPOSE, NONINFRINGEMENT OR WARRANTY ARISING FROM A COURSE OF DEALING, USAGE, OR TRADE PRACTICE, ARE HEREBY EXCLUDED TO THE MAXIMUM EXTENT ALLOWED BY APPLICABLE LAW.

You assume responsibility for all results due to the selection of this product to achieve your intended results.

# Disclaimer

IN NO EVENT WILL MITUTOYO, ITS AFFILIATED AND RELATED COMPANIES AND SUPPLIERS BE LIABLE FOR ANY LOST REVENUE, PROFIT, OR DATA, OR FOR SPECIAL, DIRECT, INDIRECT, CONSEQUENTIAL, INCIDENTAL, OR PUNITIVE DAMAGES HOWEVER CAUSED AND REGARDLESS OF THE THEORY OF LIABILITY ARISING OUT OF THE USE OF OR INABILITY TO USE THIS PRODUCT EVEN IF MITUTOYO OR ITS AFFILIATED AND RELATED COMPANIES AND/OR SUPPLIERS HAVE BEEN ADVISED OF THE POSSIBILITY OF SUCH DAMAGES.

If, notwithstanding the foregoing, Mitutoyo is found to be liable to you for any damage or loss which arises out of or is in any way connected with use of this product by you, in no event shall Mitutoyo's and/or its affiliated and related companies' and suppliers' liability to you, whether in contract, tort (including negligence), or otherwise, exceed the price paid by you for the product only.

The foregoing limitations shall apply even if the above-stated warranty fails of its essential purpose. BECAUSE SOME COUNTRIES, STATES OR JURISDICTIONS DO NOT ALLOW THE EXCLUSION OR THE LIMITATION OF LIABILITY FOR CONSEQUENTIAL OR INCIDENTAL DAMAGES, IN SUCH COUNTRIES, STATES OR JURISDICTIONS, MITUTOYO'S LIABILITY SHALL BE LIMITED TO THE EXTENT PERMITTED BY LAW.

**MEMO**

# 1 Overview

This chapter describes the EJ Counter overview, part names and their functions.

1.1 Main Functions and Features ..... 12
1.2 System Configuration ..... 13
1.3 Supported Linear Gages ..... 14
1.4 Part Names ..... 16
1.5 Standard Accessories ..... 18
1.6 Operation Flow ..... 19

## 1.1 Main Functions and Features

EJ Counter is a compact display unit for use with Linear Gages.

- It can be connected to the Linear Gages which support the differential square wave output (regardless of whether such gages have an origin point mark).
- This is a compact and space-saving interface unit, which is attached to a DIN rail to be used.
- A single counter can be connected to two Linear Gages. Further, up to eight EJ Counters can be linked together, allowing connection to up to 16 Linear Gages.
- The counter provides functions such as tolerance judgment, peak hold, and display of 2-axes sum/difference calculation between two of the same connected counters I/O output of tolerance judgment is also possible.
- The counter can be connected to a PC or PLC (programmable logic controller) through the optional interface unit, allowing output of measurement results. The interface unit also makes it possible to make various EJ Counter settings from a PC.

# 1.2 System Configuration

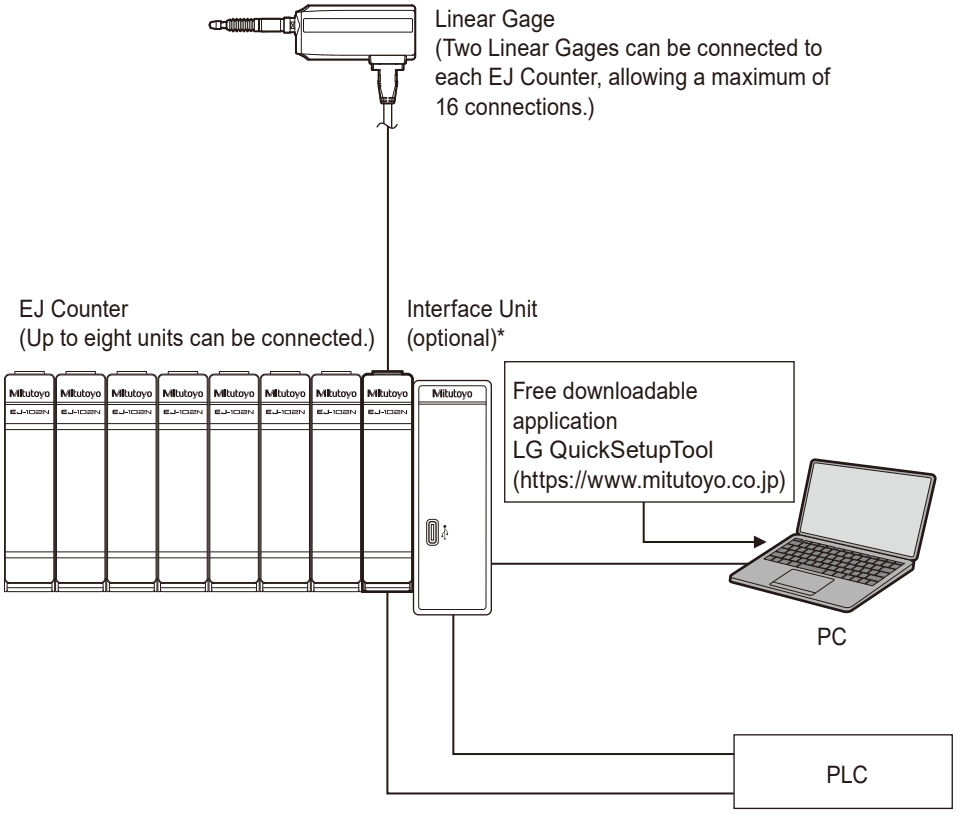


* Any of the following interface units can be connected.
Interface Unit USB (Part No. 21HZA149)
Interface Unit CC-Link (Part No. 21HZA186)
Interface Unit PROFINET (Part No. 21HZA187)
Interface Unit EtherNet/IP (Part No. 21HZA188)
Interface Unit EtherCAT (Part No. 21HZA264)

**Tips**

- For details on Linear Gages that can be connected to this product, see "1.3 Supported Linear Gages" on page 14.
- Select and purchase Linear Gages according to your application.
- The interface unit is optional.
- PCs and/or PLCs must be provided by the customer.

# 1.3 Supported Linear Gages

Linear Gages compatible with EJ Counter are as follows.

## ■ Linear Gages with 10-pin connector

| Code No. | Model No. | Specifications | | |
|---|---|---|---|---|
| | | Type | Resolution | Stroke |
| 542-190 | LG100-110 | Standard/with origin | 0.001 mm (1 μm) | 10 mm |
| 542-191 | LG100-0510 | | 0.0005 mm (0.5 μm) | |
| 542-192 | LG100-0110 | | 0.0001 mm (0.1 μm) | |
| 542-193 | LG100-125 | | 0.001 mm (1 μm) | 25 mm |
| 542-194 | LG100-0525 | | 0.0005 mm (0.5 μm) | |
| 542-195 | LG100-0125 | | 0.0001 mm (0.1 μm) | |
| 542-196 | LG100-150 | | 0.001 mm (1 μm) | 50 mm |
| 542-197 | LG100-0550 | | 0.0005 mm (0.5 μm) | |
| 542-186 | LG200-110 | Standard | 0.001 mm (1 μm) | 10 mm |
| 542-187 | LG200-0510 | | 0.0005 mm (0.5 μm) | |
| 542-188 | LG200-0110 | | 0.0001 mm (0.1 μm) | |

## ■ Linear Gages with 8-pin connector

**Tips**

- An optional adapter cable (Part No. 21HZA194) is required for connection.
  For adapter cable external dimensions, see "6.3 Options" on page 73.
- Connection to Linear Gages other than those listed below is possible as long as they support differential square wave output (optional adapter cable required).

| Code No. | Model No. | Specifications | | |
|---|---|---|---|---|
| | | Type | Resolution | Stroke |
| 542-164 | LGF-110ZL-B | Standard/with origin | 0.001 mm (1 μm) | 10 mm |
| 542-165 | LGF-125ZL-B | | | 25 mm |
| 542-166 | LGF-150ZL-B | | | 50 mm |
| 542-174 | LGF-0510ZL-B | | 0.0005 mm (0.5 μm) | 10 mm |
| 542-175 | LGF-0525ZL-B | | | 25 mm |
| 542-176 | LGF-0550ZL-B | | | 50 mm |

## ■ Linear Gages with 6-pin connector

**Tips**

- An optional adapter cable (Part No. 21HZA193) is required for connection.
  For adapter cable external dimensions, see "6.3 Options" on page 73.
- Connection to Linear Gages other than those listed below is possible as long as they support differential square wave output (optional adapter cable required).
- When using this product, please use with a DC power noise filter. For details, see "2.3.2 DC Power Supply Connection" on page 29.

| Code No. | Model No. | Specifications | | | |
|---|---|---|---|---|---|
| | | Type | Resolution | Stroke | Notes |
| 542-161 | LGF-110L-B | Standard | 0.001 mm (1 μm) | 10 mm | |
| 542-162 | LGF-125L-B | | | 25 mm | |
| 542-163 | LGF-150L-B | | | 50 mm | |
| 542-171 | LGF-0510L-B | | 0.0005 mm (0.5 μm) | 10 mm | |
| 542-172 | LGF-0525L-B | | | 25 mm | |
| 542-173 | LGF-0550L-B | | | 50 mm | |
| 542-181 | LGF-0110L-B | | 0.0001 mm (0.1 μm) | 10 mm | Must be connected through a DC power noise filter. |
| 542-182 | LGF-0125L-B | | | 25 mm | |
| 542-156 | LGK-110 | Slim (ø12) | 0.001 mm (1 μm) | 10 mm | |
| 542-157 | LGK-0510 | | 0.0005 mm (0.5 μm) | | |
| 542-158 | LGK-0110 | | 0.0001 mm (0.1 μm) | | |
| 542-204 | LGB-105L | Slim (ø8) | 0.001 mm (1 μm) | 5 mm | |
| 542-222 | LGB-110 | | | 10 mm | |
| 542-222H | LGB-110H | | | | High precision |
| 542-224 | LGB-110-1 | | | | Low measuring force |
| 542-230 | LGB-110AR | | | | Air driven |
| 542-246 | LGB2-0105L | Slim (ø9.52/8) | 0.0001 mm (0.1 μm) | 5 mm | |
| 542-244 | LGB2-105L | | 0.001 mm (1 μm) | | |
| 542-262 | LGB2-110 | | | 10 mm | |
| 542-262H | LGB2-110H | | | | High precision |
| 542-264 | LGB2-110-1 | | | | Low measuring force |
| 542-270 | LGB2-110AR | | | | Air driven |
| 542-312 | LG-01100 | Long stroke | 0.0001 mm (0.1 μm) | 100 mm | |
| 542-316 | LG-01100C | | | | Low measuring force |
| 542-314 | LG-01100P | | | | With rubber cap |
| 542-332 | LG-1100 | | 0.001 mm (1 μm) | | |
| 542-336 | LG-1100C | | | | Low measuring force |
| 542-334 | LG-1100P | | | | With rubber cap |

# 1.4 Part Names

## 1.4.1 Main Unit

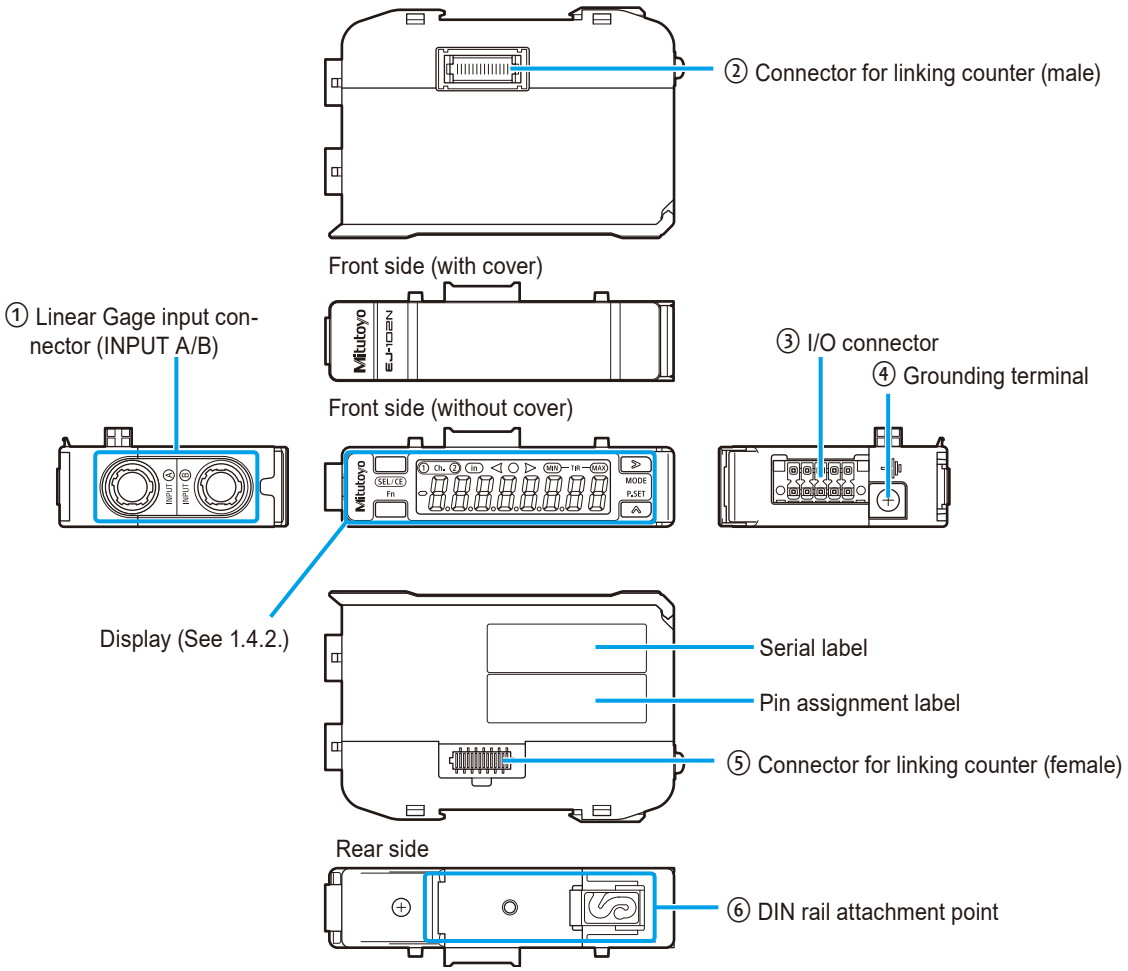


| No. | Name | Description |
|---|---|---|
| ① | Linear Gage input connector (INPUT A/B) | Linear Gages can be connected to each of inputs A and B.<br>The Linear Gage connected to INPUT A is referred to as the A-axis, and that connected to INPUT B as the B-axis. |
| ② | Connector for linking counter (male) | Allows connection to another EJ Counter or optional interface unit. |
| ③ | I/O connector | For connection to the power supply or external equipment using the provided connector plug. |
| ④ | Grounding terminal | For connection to ground using the provided ground lead and ground plate. |
| ⑤ | Connector for linking counter (female) | Allows connection to another EJ Counter or terminal resistance unit.<br>**Tips**<br>A terminal resistance unit is provided with the optional interface unit. |
| ⑥ | DIN rail attachment point | Used for attaching this product to a DIN rail. |

## 1.4.2 Display

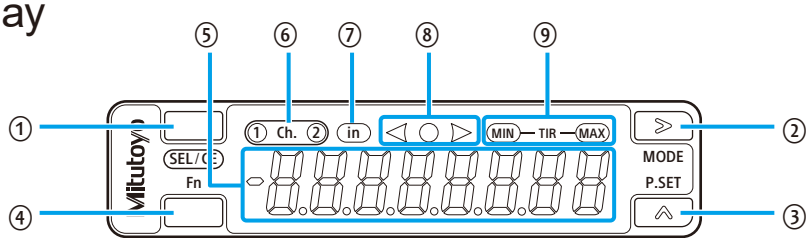


### ■ Operation key

| No. | Name | Description |
|---|---|---|
| ① | [SEL/CE] key | Used for switching channels and moving between items when making various settings.<br>Cancels errors when pressed together with the [Fn] key.<br>**Tips**<br>For details about the A-axis, B-axis and channels, see "■ Advanced parameters" on page 47. |
| ② | [MODE] (>) key | Used for peak mode selection and for moving between digits when making various settings. When pressed together with the [Fn] key, enters the parameter setting screen. |
| ③ | [P.SET] (^) key | Used for setting preset values.<br>Clears preset or peak values when pressed together with the [Fn] key. When setting preset / tolerance or parameter values, increases the value of the selected digit. |
| ④ | [Fn] key | Used to start and end setting of preset/tolerance values. |

### ■ Numeric and indicator display screen

| No. | Name | Description |
|---|---|---|
| ⑤ | Numeric display | Displays numeric values. |
| ⑥ | Displays the channel (Ch.). | The selected channel (Ch.) lights.<br>Content of individual channel (Ch.) display varies according to the setting of Parameter Number 03.<br>While on HOLD, the number of the selected channel (Ch.) blinks.<br>**Tips**<br>For details about Parameter Number 03, see "■ Advanced parameters" on page 47 |
| ⑦ | Unit display (EJ-102NE only) | The LED lights when display in inches is selected. The LED goes out when display in mm is selected. |
| ⑧ | Tolerance indicator | Indicates the result of tolerance judgment.<br>◀ ◯ ▶ is displayed when an error occurs.<br>**Tips**<br>For details about the tolerance judgment display, see "3.2.4 Tolerance Judgment" on page 39 |

| No. | Name | Description |
|---|---|---|
| ⑨ | Peak indicators | The LEDs go on or off according to the peak mode selected.<br>When off: The current value is displayed.<br>When only MAX is lit: The maximum value is displayed.<br>When only MIN is lit: The minimum value is displayed.<br>When both MAX and MIN are lit: The run-out width (maximum value - minimum value) is displayed. |

## 1.5 Standard Accessories

| Name | Quan-tity | Description |
|---|---|---|
| Connector plug<br>(Phoenix Contact connector DFMC 1,5/ 5-ST-3,5-LR - 1790519)<br> 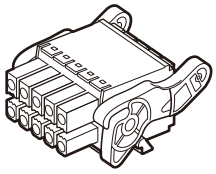 | 1 | Power supply and I/O signal lines are wired to this plug, which is plugged into the connector on the main unit.<br>**Tips**<br>For details, see "2.3.3 Connecting the AC Adapter (Optional)" on page 31. |
| Ground plate<br> 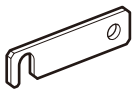 | 1 | When linking EJ counters together, use this plate to make connection between ground terminals of adjacent EJ counter and reduce ground lead wiring.<br>**Tips**<br>For details, see "2.3.1 Ground Connection" on page 27. |
| Ground Lead<br>(Wire number: AWG18 x 4 m, Sheath: Gray)<br> 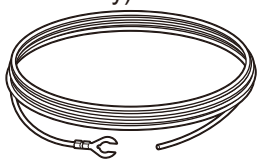 | 1 | Use this wire to connect the EJ Counter to customer-provided ground. Cut to required length for use.<br>**Tips**<br>For details, see "2.3.1 Ground Connection" on page 27. |
| Quick Start Guide | 1 | 99MBC140B |
| WEEE User's Manual | 1 | |
| Warranty | 1 | |

**Tips**

- The AC adapter, AC cable and DC plug are optional.
- For details about options, see "6.3 Options" on page 73.

# 1.6 Operation Flow

The basic flow of operation is explained below.

Be sure to perform operations enclosed by solid lines. Perform operations enclosed by dashed lines as necessary.

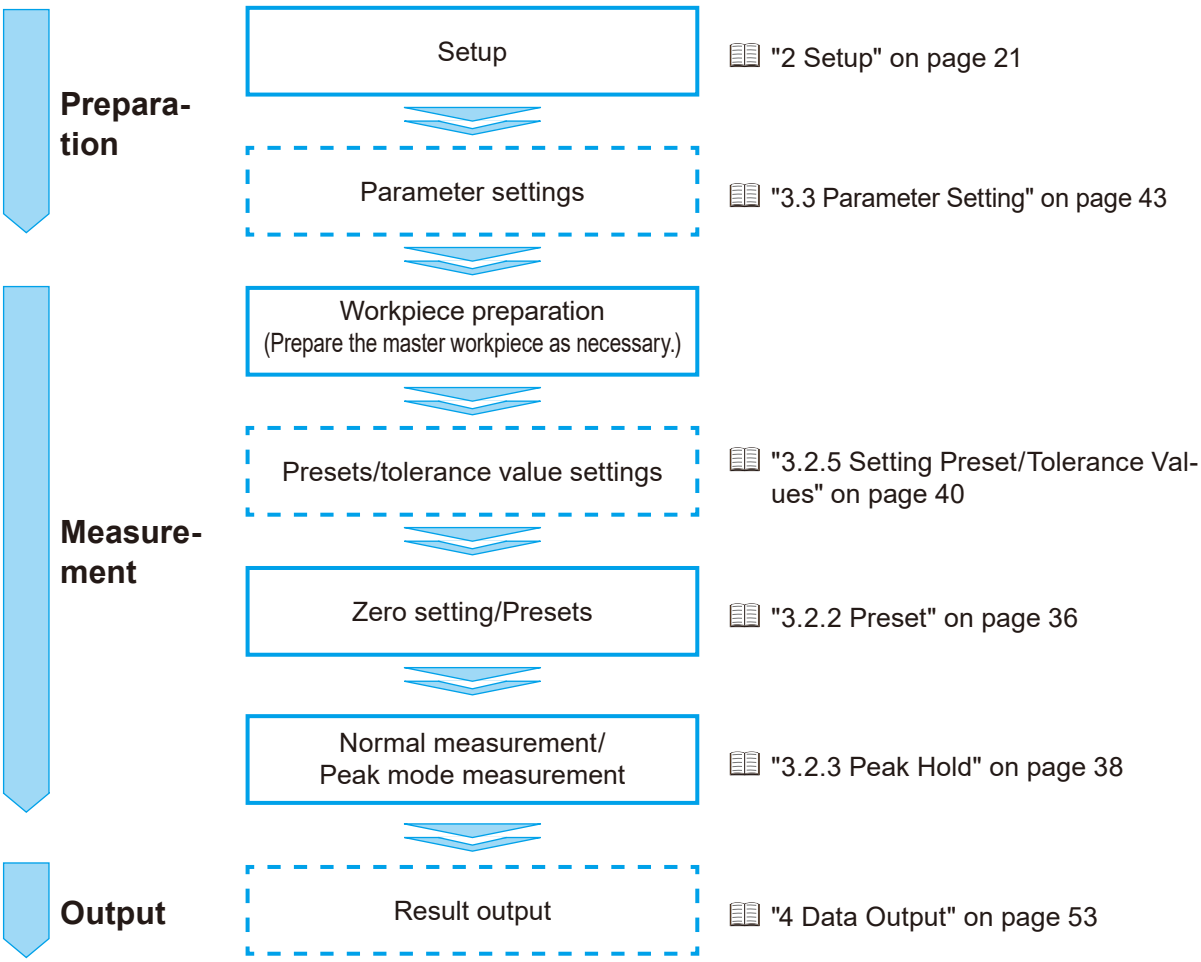

## MEMO

# 2 Setup

2.1 Mounting ..... 22
2.2 Linear Gage Connection ..... 25
2.3 Power Supply Connection ..... 26

# 2.1 Mounting

## 2.1.1 DIN Rail Attachment / Removal

This product is attached to a DIN rail for use.

**IMPORTANT**

After first removing Linear Gages and connector plugs, the EJ Counter is attached to or removed from the DIN rail a unit at a time.

**Tips**

A DIN rail must be provided by the customer.

Suitable DIN rail type names (IEC 60715): TH35-7.5Al, TH35-7.5Fe, TH35-15Fe

### ■ Attachment

Press the clip (gray) on the rear side of this product onto the DIN rail, and then hook the clip on the opposite side onto the DIN rail.

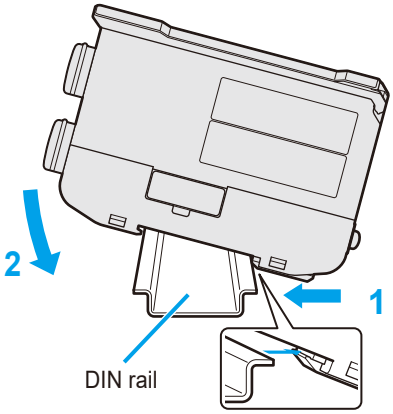


### ■ Removal

Pressing this product in the direction indicated by arrow 1, raise the clip on the opposite side so that it comes clear of the rail.

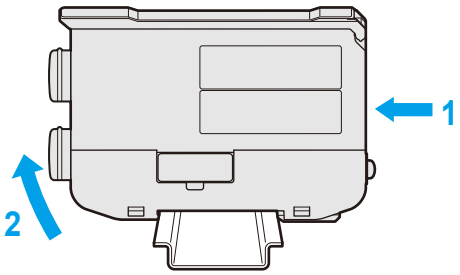

## 2.1.2 Linking Multiple EJ Counters

Up to eight EJ Counters can be linked together.
The optional interface units can also be linked together.

**1 Remove the protective cover from the counter linkage connectors of EJ Counters to be linked together.**

**NOTICE**

Leave the protective covers in place on EJ Counters that are not to be linked. Leaving the connectors uncovered could result in introduction of noise, accumulation of contaminants on the terminals, or damage to the EJ Counter.

**2 Attach EJ Counters to the DIN rail one at a time.**

**Tips**

For details, see "2.1.1 DIN Rail Attachment / Removal" on page 22.

**3 Link EJ Counters together.**

Slide the EJ Counter to be connected along the rail so that the counter linkage connector (female) is firmly mated with the counter linkage connector (male) on the other counter.

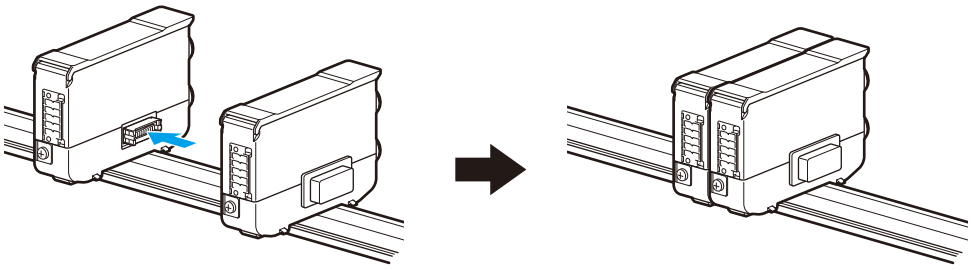

**NOTICE**

Do not link more than eight EJ Counters together. Failure to observe this precaution may result in damage.

**IMPORTANT**

When sliding EJ Counters along the DIN rail, move them slowly.

## 2.1.3 Attaching the DIN Rail Fixing Bracket

EJ Counters attached to the DIN rail can be fastened in place using the optional DIN rail fixing bracket (Part No. 21HZA157).

**1 Hook the clip that is closer to the screw hole in the fixing bracket onto the DIN rail, then press toward the opposite side and hook the other clip onto the rail.**

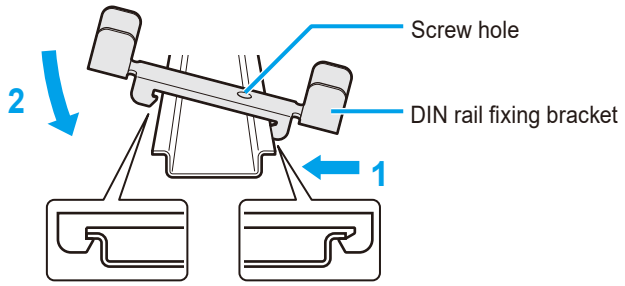


**2 Slide the fixing bracket along the DIN rail to where it comes in contact with the EJ Counter.**

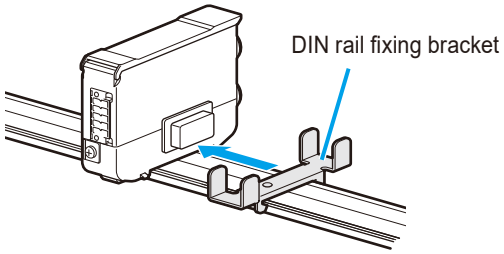


**3 Fasten the fixing bracket in place by threading the screw provided with the fixing bracket into the screw hole in the bracket, and then tightening the screw so that it presses against the DIN rail, immobilizing the fixing bracket.**

**Tips**

The screw provided with the bracket is suitable for fastening to a TH35-7.5 rail.
A different screw (M4) must be used for fastening to a TH35-15 rail.

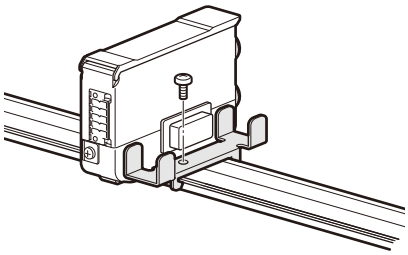

**4 Repeat steps 1 through 3 to attach a fixing bracket to the opposite side of the EJ Counter.**

# 2.2 Linear Gage Connection

Connecting a Linear Gage to the EJ Counter.
Be sure to shut off the power before doing this.

**1 Remove the protective cover from the EJ Counter's Linear Gage connector.**

**2 Plug the connector on the Linear Gage into the Linear Gage connector on the EJ Counter.**

Align the key on the connector of the Linear Gage with the slot in the Linear Gage connector on the EJ Counter, and then press the connectors together until they click into place.

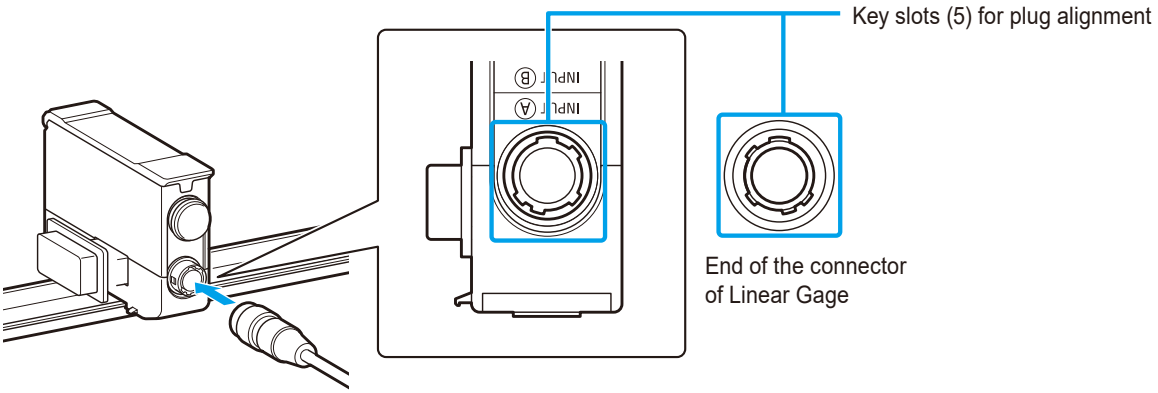


**3 When disconnecting a Linear Gage, slide the lock cover on the connector of the Linear Gage in the direction away from the EJ Counter, and then pull to disconnect the connectors.**

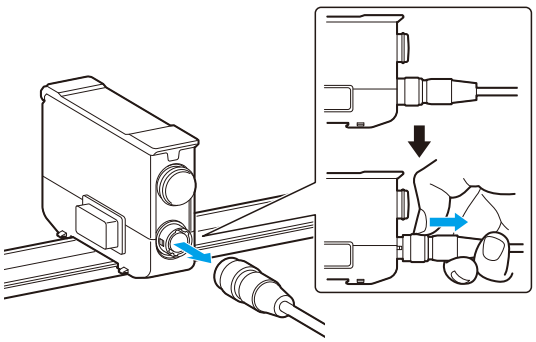

**NOTICE**

- Do not forcibly pull the connectors apart, as doing so could destroy the Linear Gage.
- When connecting only a single Linear Gage, leave the protective cover in place on the connector that is not used. Leaving the connectors uncovered could result in introduction of noise, accumulation of contaminants on the terminals, or damage to the EJ Counter.
- Fasten the Linear Gage so that it does not put any strain on the EJ Counter. See the Linear Gage User's Manual for the connection procedure.

**Tips**

- When connecting only a single Linear Gage, set Parameter Number 03 to 6 or 7. For details about Parameter Number 03, see "■ Advanced parameters" on page 47.
- For details on Linear Gages that can be connected to this product, see "1.3 Supported Linear Gages" on page 14.

## 2.3 Power Supply Connection

This section describes the power supply connection procedure.

**NOTICE**

Never use a power source that is shared with other equipment that draws high power. Incorrect operation or damage may result.

**IMPORTANT**

When using multiple EJ Counters linked together, connection of power to one EJ Counter also supplies power to the other linked counters.

## 2.3.1 Ground Connection

This section describes the procedure for making ground connections using the provided ground lead and ground plate.

Be sure to connect this product to ground before connecting it to the power supply. Failure to ground the product will make it susceptible to electrical noise.

**Tips**

When using multiple EJ Counters that are linked together, connect the ground lead to just one EJ Counter, then share the ground with other EJ Counters using ground plates.

**1 Strip about 15 mm of the sheath from the end of the ground lead opposite from the end with the Y lug.**

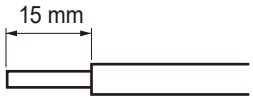


Ground lead

**2 Loosen the ground terminal screw on the counter and wrap the stripped end of the ground lead around the screw.**

**3 Tighten the ground terminal screw to secure the ground lead.**

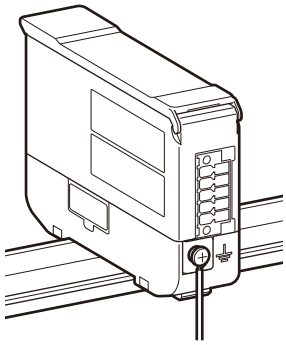

**4 Connect the Y lug on the other end of the ground lead to a suitable ground.**

**Tips**

- The Y lug can be fastened with screw of about M5 size.
- If the ground lead is too long, it may be shorted to a length that suits the customer's circumstances.

## ■ When linking multiple EJ Counters together

When using multiple EJ Counters that are linked together, use ground plates to allow them to share a common grounding.

**1 Remove the ground terminal screw.**

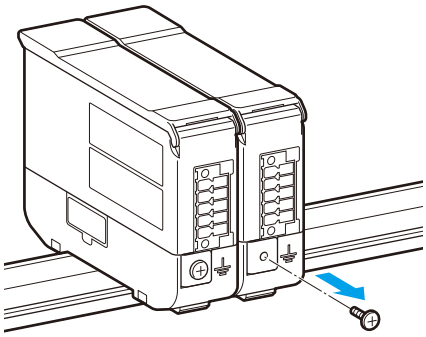

**2 Put the removed screw through the hole in the ground plate and loosely attach the ground plate to the ground terminal.**

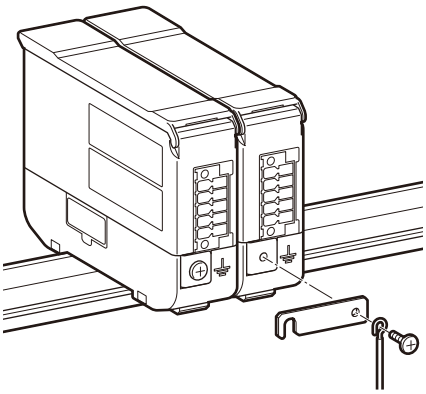

**3 Loosen the ground terminal screw on the adjacent EJ Counter and hook the notch at the end of the ground plate over the screw.**

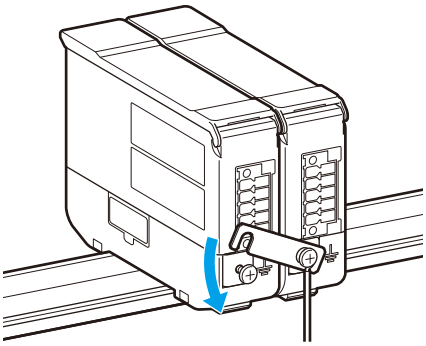

**4 Repeat steps 1 through 3 to attach ground plates to other linked EJ Counters.**

**5 Tighten the ground terminal screws on all of the EJ Counters.**

## 2.3.2 DC Power Supply Connection

This section describes the procedure for DC power supply connection.

**IMPORTANT**

- When using a commercial power supply, make sure that it is rated for 10 V–27 V and an output current of 3 A or greater. Make sure that the power cable used to connect this product to its power supply does not exceed 30 m in length, and use only a one-to-one connection between the product and the power supply.
- Do not use a DC power supply that is shared with other equipment that draws high power.
- When using this product connected to an LGF-series Linear Gage with resolution of 0.0001 mm (0.1 µm), please use with a DC power noise filter. (The noise filter used for testing by Mitutoyo is the Cosel ESP-06-472-D.)
  For applicable Linear Gages, see "■ Linear Gages with 6-pin connector" on page 15.

**1 Connect the power cable to the provided connector plug.**

Pin 1 (A): 10 V–27 V DC

Pin 2 (B): GND

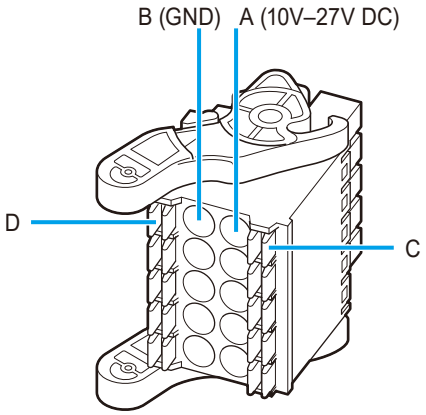


● **When the cable is fitted with pin terminals**

Push the pins all the way in to terminals A and B.

**Tips**

- Compatible pin terminals are those with conductive ferrule sleeves that are 10 mm in length.
  Recommended part: Phoenix Contact part number 3241129 AI 0,34-10 TQ
- The EJ Counter internal ground is connected to ground internally.

● **When the cable ends in stranded wire**

Slip the wire tips all the way into terminals A and B while using a tool such as a flat-head precision screwdriver to fully depress connector plugs C and D, and then release the buttons.

Tug on the cable to make sure that the stranded wires are securely fastened to the connector plug.

● **Disconnecting the cable**

To disconnect the cable from the plug, pull out while pressing the buttons with a flat-head precision screwdriver or the like.

**NOTICE**

Forcibly pulling the connector plug out will result in damage to the connector or discontinuities in the cable.

## 2 Center the levers on both sides of the connector plug.

**Tips**

The levers have three discrete positions. If the levers are in the bottom-most position (A), it will be hard to plug the connector plug into the EJ Counter.

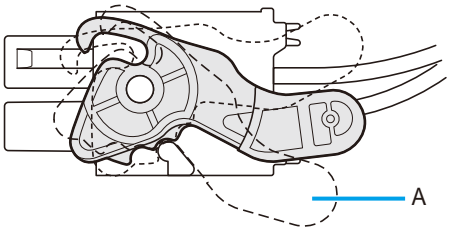


## 3 Plug the connector plug into the I/O connector on the EJ Counter.

Align the claws on the levers on the side of the connector plug with the holes on both sides of the I/O connector, and then plug the connector plug into the I/O connector on the EJ Counter.
Push the connector plug in to where its claws engage with the holes on both sides of the I/O connector and the lever won't go any further.

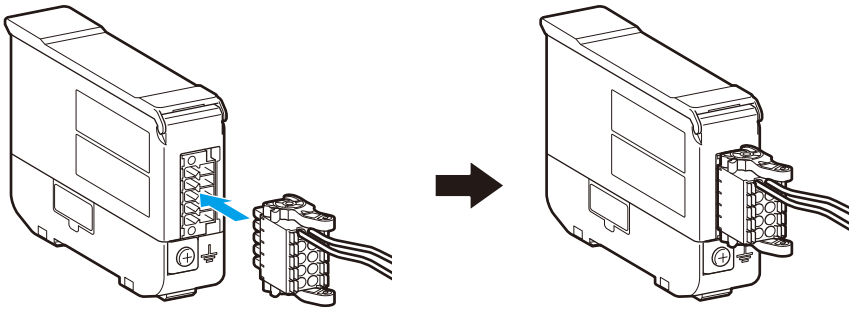

**NOTICE**

When you need to unplug the connector plug, do so by operating the levers on both sides so that the claws disengage from the EJ Counter connector and then pulling the plug out of the connector on the EJ Counter (to the left as indicated in the figure below). Forcibly pulling the connector plug out will result in damage.

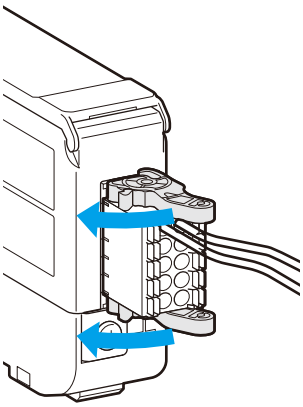

## 2.3.3 Connecting the AC Adapter (Optional)

This section describes the procedure for DC power supply connection using the following options.

- DC jack with pin terminals (Part No. 21HZA209)
- AC adapter (Part No. 357651)
- AC cable (Part Number varies according to destination country or region.)
  For details, see "6.3 Options" on page 73.

**1 Connect the DC jack with pin terminals to the provided connector plug.**

Push the pin terminal attached to the DC jack's red cable all the way in to terminal A, and the pin terminal connected to the black cable all the way into terminal B.

**Tips**

With the DC jack that is equipped with pin terminals, press the terminals directly into the holes.

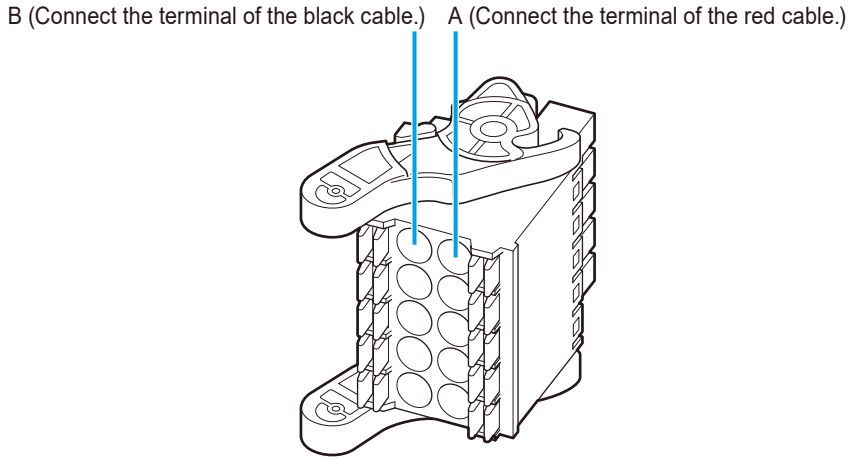


### Disconnecting the cable

To disconnect the cable from the plug, pull out while pressing the buttons with a flat-head precision screwdriver or the like.

**NOTICE**

Forcibly pulling the connector plug out will result in damage to the connector or discontinuities in the cable.

**2 Center the levers on both sides of the connector plug.**

**Tips**

The levers have three discrete positions. If the levers are in the bottom-most position (A), it will be hard to plug the connector plug into the EJ Counter.

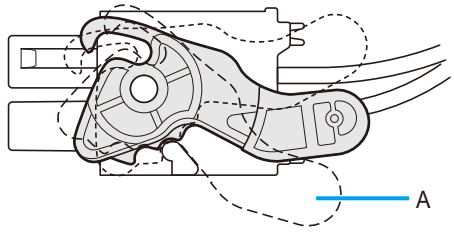

## 3 Plug the connector plug into the I/O connector on the EJ Counter.

Align the claws on the levers on the side of the connector plug with the holes on both sides of the I/O connector, and then plug the connector plug into the I/O connector on the EJ Counter.
Push the connector plug in to where its claws engage with the holes on both sides of the I/O connector and the lever won't go any further.

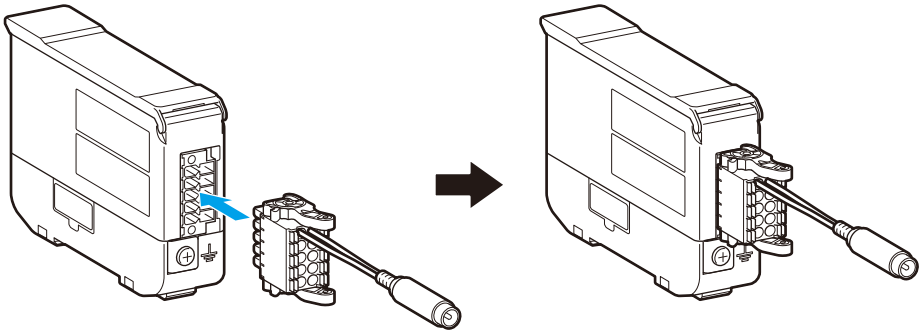

**NOTICE**

When you need to unplug the connector plug, do so by operating the levers on both sides so that the claws disengage from the EJ Counter connector and then pulling the plug out of the connector on the EJ Counter (to the left as indicated in the figure below). Forcibly pulling the connector plug out will result in damage.

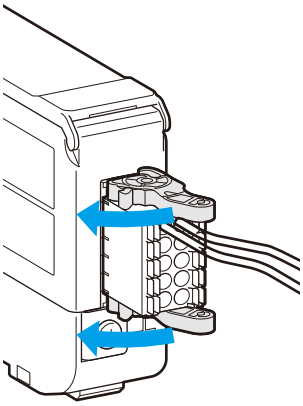

## 4 Connect the power cable to the AC adapter, and then plug the power plug into the outlet.

## 5 Connect the AC adapter to the DC jack with pin terminals.

**IMPORTANT**

Make sure that the AC adapter does not come loose from the DC jack with pin terminals during measurement.

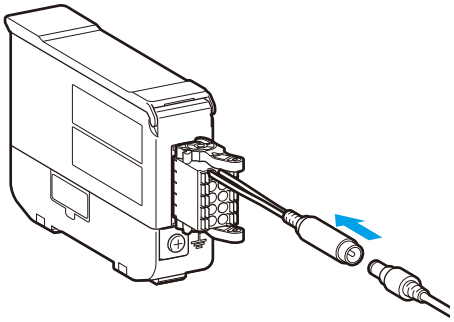

# 3 Operation Procedure

3.1 Power ON/OFF ..... 34
3.2 Measurement Functions ..... 35
3.3 Parameter Setting ..... 43

# 3.1 Power ON/OFF

This product is not equipped with a power switch.

To power the product ON/OFF, either switch the power supply itself ON/OFF, or connect/disconnect the power cable.

When the power goes on, an ID number is automatically assigned, and then the product enters the stand-by state.

Counting begins when the [SEL/CE] key is pressed while the product is in the stand-by state.

Counter stand-by state

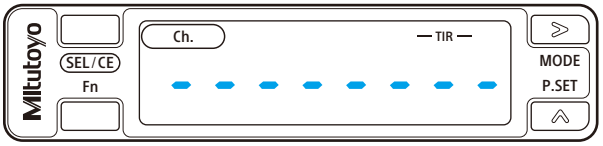


Furthermore, when using multiple EJ Counters that are linked together, ID numbers are assigned in sequence from the EJ Counter that is at the top when counter displays are viewed with the characters oriented upright.

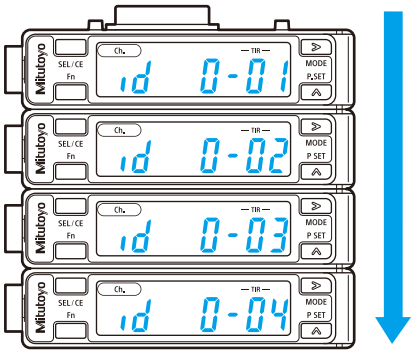


ID numbers are assigned sequentially (figure shows automatic ID number assignments).

## Tips

- ID numbers from 01 to 08 are assigned automatically. If arbitrary ID numbers (50 to 99) were set for Parameter Number 19 when the product was last powered on, those values are assigned instead.
- If numeric display is selected for Parameter Number 09 when the product was last powered on, counting starts immediately upon connection of INC model Linear Gages.
  When Linear Gages with origin mark are connected, whether counting begins immediately at power-on or is deferred pending origin detection depends on the setting made for Parameter Number 05.
- For details, see "3.3.2 List of Parameters" on page 45.

Origin detection wait state

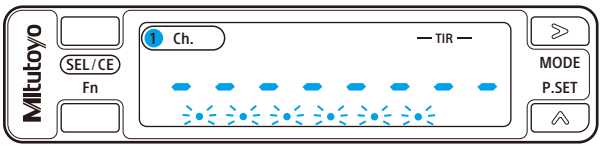

# 3.2 Measurement Functions

## 3.2.1 Switching the Display Channel (Ch.)

During count display screen display, the displayed channel (Ch.) changes each time the [SEL/CE] key is pressed.

**Tips**

- The factory default is to display the A-axis count on Ch. 1 and the B-axis count on Ch. 2.
- Content of individual channel (Ch.) displays can be changed by the setting of Parameter Number 03.
  For details about Parameter Number 03, see "■ Advanced parameters" on page 47.

Channel (Ch.) 1 display

Channel (Ch.) 2 display

## 3.2.2 Preset

Preset replaces the current value with an arbitrary value (preset value).

**Tips**

- The factory default preset value is 0.
  For details, see "3.2.5 Setting Preset/Tolerance Values" on page 40.
- When making zero settings, do so after setting the preset value to 0.

### ■ Setting preset values

**Tips**

For details, see "3.2.1 Switching the Display Channel (Ch.)" on page 35.

**1 Display the channel for which you wish to set the preset value.**

**2 Set the peak mode to current value display.**

Press the [MODE] (>) key so that the peak indicator (MIN/MAX) goes out.

**Tips**

For details, see "3.2.3 Peak Hold" on page 38.

**3 Press the [P.SET] (^) key.**

» The current value is replaced with the preset value.

» This clears the maximum and minimum values and the run-out width.

## ■ Returning to the count value that preceded preset

**Tips**

Return to the count value that preceded preset is only possible for the currently value display. When the maximum, minimum and run-out (difference between maximum and minimum) values are displayed, first return display to the current value display.

For details, see "3.2.3 Peak Hold" on page 38.

**1 Display the channel for which you wish to restore the count value that preceded preset.**

**Tips**

For details, see "3.2.1 Switching the Display Channel (Ch.)" on page 35.

**2 Press and hold the [Fn] key, and then press the [P.SET] (^) key.**

» The preset is canceled and the preceding count value is restored.

» This clears the maximum and minimum values and the run-out width.

## 3.2.3 Peak Hold

In addition to display of the current value, maximum/minimum values and run-out width (the difference between the maximum and minimum values) can be detected and displayed.

### ■ Switching the peak mode

**1 Display the channel for which you wish to switch the peak mode.**

**Tips**

For details, see "3.2.1 Switching the Display Channel (Ch.)" on page 35.

**2 Switch the peak mode.**

The peak mode changes each time you press the [MODE] (>) key.

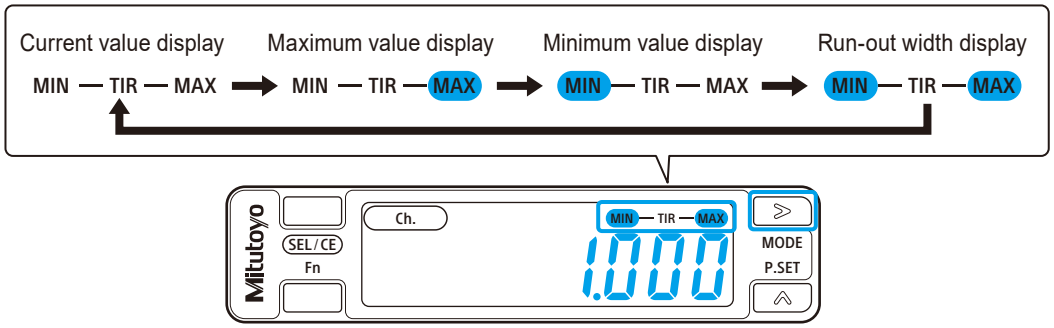


### ■ Clearing the peak values

**1 Display the channel for which you wish to clear the peak values.**

**Tips**

For details, see "3.2.1 Switching the Display Channel (Ch.)" on page 35.

**2 Switch the peak mode to maximum, minimum or run-out value display.**

The peak mode changes each time you press the [MODE] (>) key.

**3 Press and hold the [Fn] key, and then press the [P.SET] (^) key.**

» This clears the maximum and minimum values and the run-out width.

## 3.2.4 Tolerance Judgment

Tolerance judgment is performed when it is enabled in the parameter settings.
There are two types of tolerance judgment: 3-step tolerance judgment and 5-step tolerance judgment.

**Tips**

To perform tolerance judgment, first set Parameter Number 08 to 0 (for 3-step parameter judgment) or 1 (for 5-step parameter judgment), and then set the tolerance values.
For details, see "3.3 Parameter Setting" on page 43, "3.2.5 Setting Preset/Tolerance Values" on page 40.

### ■ 3-step tolerance

When S1 and S4 are set as tolerance values, 3-step tolerance judgment is performed as follows:

| Judgment conditions | Tolerance indicator |
|---|---|
| Measurement result < S1 | ◀ ○ ▷ (L1) |
| S1 ≤ measurement result ≤ S4 | ◁ ● ▷ (L3) |
| S4 < measurement result | ◁ ○ ▶ (L5) |
| Error resulting in no measurement | ◀ ○ ▶ |

### ■ 5-step tolerance

When S1, S2, S3 and S4 are set as tolerance values, 5-step tolerance judgment is performed as follows:

| Judgment conditions | Tolerance indicator |
|---|---|
| Measurement result < S1 | ◀ ○ ▷ (L1) |
| S1 ≤ measurement result < S2 | ◀ ● ▷ (L2) |
| S2 ≤ measurement result ≤ S3 | ◁ ● ▷ (L3) |
| S3 < measurement result ≤ S4 | ◁ ● ▶ (L4) |
| S4 < measurement result | ◁ ○ ▶ (L5) |
| Error resulting in no measurement | ◀ ○ ▶ |

### ■ Target of tolerance judgment

The target of tolerance judgment differs according to peak mode.

| Peak mode | Target of tolerance judgment |
|---|---|
| Current value display | Current value |
| Maximum value display | Maximum value |
| Minimum value display | Minimum value |
| Run-out width display | Run-out width |

## 3.2.5 Setting Preset/Tolerance Values

Preset and tolerance values can be set for each channel.

**Tips**

- Preset value setting is not possible if speed display is set as the display mode by parameter setting.
- Tolerance value setting is not possible if no tolerance is set by parameter setting. The tolerance value settings are different for 3- and 5-step tolerance judgment. First you must select 3- or 5-step tolerance judgment in the parameter settings.

### 1 Display the channel for which you wish to set the preset and tolerance values.

**Tips**

For details, see "3.2.1 Switching the Display Channel (Ch.)" on page 35.

### 2 Press the [Fn] key.

» Display enters the preset value setting screen.

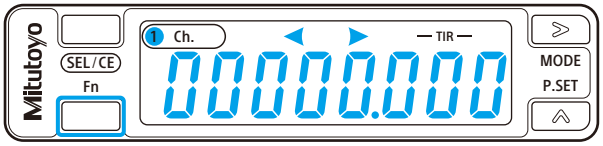


### 3 Set the preset value.

Using the [MODE] (>) key to move between digits, change the digit values using the [P.SET] (^) key.
The current digit flashes to show that it is selected.

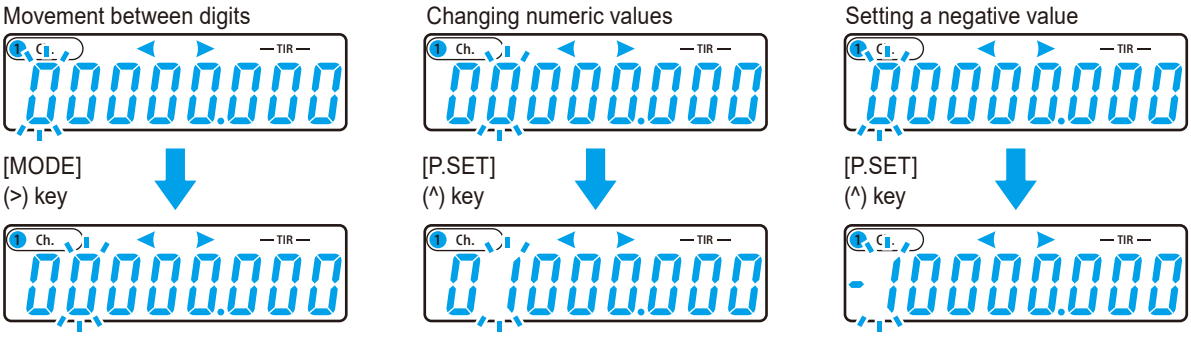


**Tips**

- While setting the preset values, ◀ ○ ▶ is displayed by the tolerance indicator.
- If you wish to set a negative preset value, you can change the highest-order digit to a value with a minus sign. The peak mode changes in the sequence shown below each time you press the [P.SET] (^) key.
  0→1→2→……→9→-0→-1→-2→……→-9→0
- The direction in which digit selection and number setting proceeds can be reversed by pressing the [MODE] (>) or [P.SET] (^) key together with the [Fn] key.
- You can omit steps 4 – 7 if you wish to finish after setting only the preset values.

### 4 Press the [SEL/CE] key.

» The preset value settings are applied.
» Display enters the tolerance value S1 setting screen.

## 5 Set tolerance value S1 (tolerance indicator display: ◀ ○ ▷).

Using the [MODE] (>) key to move between digits, change the digit values using the [P.SET] (^) key.

### Tips

- If you wish to set a negative tolerance value, you can change the highest-order digit to a minus sign.
- The direction in which digit selection and number setting proceeds can be reversed by pressing the [MODE] (>) or [P.SET] (^) key together with the [Fn] key.

## 6 Press the [SEL/CE] key.

» Tolerance value S1 will be applied.

Setting 3-step tolerance

Setting 5-step tolerance

» When setting 3-step tolerance values, display enters the tolerance value S4 (tolerance indicator display: ◁ ○ ▶) setting screen.

» When setting 5-step tolerance values, display enters the tolerance value S2 (tolerance indicator display: ◀ ● ▷) setting screen.

### Tips

The state of the tolerance indicator changes in the following sequence according to the tolerance value settings (S1, S2, S3 and S4).

| Tolerance value | | Tolerance indicator |
|---|---|---|
| 3-step tolerance value setting | 5-step tolerance value setting | |
| S1 | S1 | ◀ ○ ▷ |
| N/A | S2 | ◀ ● ▷ |
| N/A | S3 | ◁ ● ▶ |
| S4 | S4 | ◁ ○ ▶ |

## 7 Repeat steps 5 to 6 to set tolerance value S4 (tolerance values S2, S3 and S4 when setting 5-step tolerance values).

### Tips

Display returns to the preset value setting screen of step 2 when you press the [SEL/CE] key while in the tolerance value S4 setting screen.

## 8 Press the [Fn] key when done making settings.

» Display returns to the counter display screen.

### Tips

- An error (Error 90) will occur if settings are made as follows:.
  With 3-step tolerance value settings: In any case other than S1≤S4
  With 5-step tolerance value settings: In any case other than S1≤S2≤S3≤S4
- If this error occurs, press the [SEL/CE] key together with the [Fn] key to return to the preset value setting of step 2, and then do the setting over again.

## 9 Make new preset value settings as necessary.

### Tips

For details, see "3.2.2 Preset" on page 36.

# 3.3 Parameter Setting

You can set parameters to specify criteria such as the counter direction, display, and external output. Configure the settings as appropriate to your requirements.

**Tips**

- For details about basic parameters, see "■ Basic parameters" on page 45.
- For details about advanced parameters, see "■ Advanced parameters" on page 47.

## 3.3.1 Setting Procedure

Parameter settings can be made either by operating the keys on the counter, or externally through the optional interface unit.

### ■ Setting parameters by key operation

**1 Press and hold the [Fn] key, and then press the [MODE] (>) key.**

» Display enters the parameter setting screen.

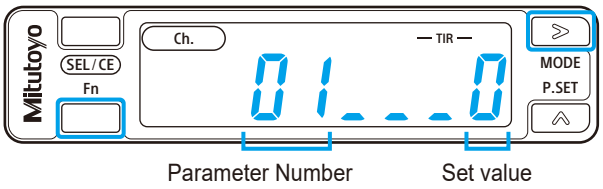


**2 Display the Parameter Number of the parameter to be set.**

The Parameter Number changes each time you press the [SEL/CE] key.

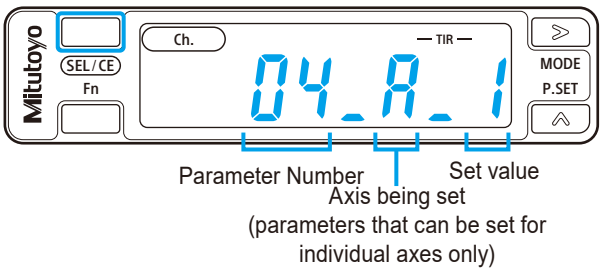


**Tips**

- With some parameters, values are set separately for the A-axis and B-axis. For parameters that are set separately for the A-axis and B-axis, the setting screen for the A-axis is displayed first, and then the setting screen for the B-axis appears upon pressing the [SEL/CE] key.
- You can cycle through the Parameter Numbers in reverse order by pressing the [SEL/CE] key together with the [Fn] key.

## 3 Change the set value.

The set value of the displayed Parameter Number changes each time you press the [P.SET] (^) key.

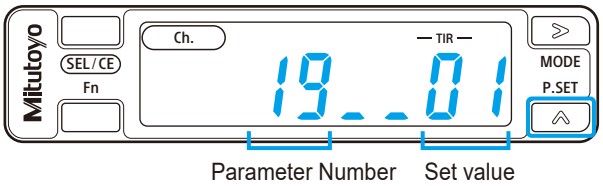


### Tips

- For settings that have two digits, you can move between digits by pressing the [MODE] (>) key.
- The set value can be decreased by pressing the [P.SET] (^) key together with the [Fn] key.

## 4 Press and hold the [Fn] key, and then press the [MODE] (>) key.

» The setting is applied.
» Display enters the counter display screen.

## ■ Setting parameters by external input

The EJ Counter's parameters can also be changed by external input through the optional interface unit.

### Tips

For details, see 📖 the separate "Interface Unit User's Manual".

## 3.3.2 List of Parameters

**IMPORTANT**

- Entry of incorrect parameter settings will prevent correct measurement results or result in display of an error.
- In case operation fails or an error is displayed, see "5 Troubleshooting" on page 63 to check setting contents and make the correct settings.

### ■ Basic parameters

Basic measurement parameters

Be sure to make these settings before starting measurement.

| No. | Set value | Per-axis setting | Set value: Operation | Default value | Description |
|---|---|---|---|---|---|
| 04 | Linear Gage resolution (minimum reading) | ✓ | 0: 0.005 mm (5 µm), 0.0002 in<br>1: 0.001 mm (1 µm), 0.00005 in<br>2: 0.0005 mm (0.5 µm), 0.00002 in<br>3: 0.0001 mm (0.1 µm), 0.000005 in | 1 | Sets the minimum reading according to the resolution of the connected Linear Gage.<br>Make settings individually for the A-axis and B-axis.<br>**Tips**<br>• Correct values will not be displayed if the settings do not match the resolution of the connected Linear Gage.<br>• The unit for minimum reading is "in" when Parameter Number 22 is set to "1". |
| 05 | Origin detection function | N/A | 0: Disabled<br>1: Enabled | 0 | Selects whether the origin function is enabled or disabled when a Linear Gage with an origin point mark is connected. |
| 06 | Counter direction | ✓ | 0: + direction<br>1: - direction | 0 | Sets the relationship between the direction in which the numeric value changes and the direction of movement of the Linear Gage plunger.<br>When 0 is set, the numeric value increases as the plunger moves toward top dead center.<br>When 1 is set, the numeric value increases as the plunger moves toward bottom dead center.<br>Make settings individually for the A-axis and B-axis. |
| 07 | Origin detection direction | ✓ | 0: + direction<br>1: - direction | 0 | When a Linear Gage with an origin mark is connected, selects the direction of the plunger of the Linear Gage for origin detection.<br>Make settings individually for the A-axis and B-axis. |

| No. | Set value | Per-axis setting | Set value: Operation | Default value | Description |
|---|---|---|---|---|---|
| 22 | Unit selection (EJ-102NE only) | N/A | 0: mm (mm/s)<br>1: in (in/s) | 0 | The unit for displayed values can be set to "mm" or "in".<br>**Tips**<br>• Changing this setting clears the preset and tolerance values.<br>• The default value is not restored even if the parameters are re-initialized.<br>• The resolution of the Linear Gage is fixed to "in". |

## ■ Advanced parameters

The advanced parameters increase the scope of utility of the product. These parameters make it possible to make settings such as selection of the tolerance judgment function and I/O-related settings.

<table>
<tr><th>No.</th><th>Set value</th><th>Per-axis setting</th><th>Set value: Operation</th><th>Default value</th><th>Description</th></tr>
<tr><td>01</td><td>Key protect</td><td>N/A</td><td>0: No key protect<br>1: Key protect</td><td>0</td><td>Operation of keys other than those used for setting parameters can be disabled to prevent operation errors.<br>Tips<br>Operation by external input cannot be disabled.</td></tr>
<tr><td>02</td><td>Origin initialization<br>(Origin clear)</td><td>N/A</td><td>0: Do not initialize.<br>1: Initialize.</td><td>0</td><td>When a Linear Gage with origin mark is connected, the origin can be initialized without cycling on the power.</td></tr>
<tr><td>03</td><td>Display mode selection</td><td>N/A</td><td><table><tr><th>Set value</th><th>Ch. 1</th><th>Ch. 2</th></tr><tr><td>0</td><td>A-axis counter</td><td>B-axis counter</td></tr><tr><td>1</td><td>Sum (A+B)</td><td>B-axis counter</td></tr><tr><td>2</td><td>Difference (A-B)</td><td>B-axis counter</td></tr><tr><td>3</td><td>A-axis counter</td><td>Sum (A+B)</td></tr><tr><td>4</td><td>A-axis counter</td><td>Difference (A-B)</td></tr><tr><td>5</td><td>A-axis speed</td><td>B-axis speed</td></tr><tr><td>6</td><td>A-axis counter</td><td>A-axis speed</td></tr><tr><td>7</td><td>B-axis counter</td><td>B-axis speed</td></tr></table></td><td>0</td><td>Selects the values to be displayed on Ch. 1 and Ch. 2.<br>Tips<br>• When using only the A-axis or the B-axis, set 6 or 7.<br>• If the displayed content is the same both before and after changing the setting, the tolerance value, preset value and preset state settings are maintained.<br>• In order to set the speed display, set the speed sampling cycle with Parameter Number 17.<br>• The speed display unit is mm/s (or in/s). The display of the lower 1 or 2 digits may be fixed depending on the speed sampling cycle.<br>• When the minimum value (MIN) is selected for Peak mode, the speed display indicates the maximum speed in the reverse direction.<br>• Because speed display is simplified, it is not suitable for feedback control.</td></tr>
</table>

| No. | Set value | Per-axis setting | Set value: Operation | Default value | Description |
|---|---|---|---|---|---|
| 08 | Tolerance judgment setting | N/A | 0: 3-step tolerance judgment<br>1: 5-step tolerance judgment<br>2: No tolerance judgment | 0 | Selects whether or not the tolerance judgment function is used.<br>When the tolerance judgment is used, selects the number of steps of tolerance judgment.<br>**Tips**<br>Changing the settings does not clear tolerance values S1 to S4, which are maintained. However, the following adjustments may be made in the event that the following inconsistencies occur.<br>When the setting is changed from "3-step tolerance" or "No tolerance" to "5-step tolerance":<br>When S2 < S1 or S4 < S2, S2 is replaced with the value of S1.<br>When S3 < S1 or S4 < S3, S3 is replaced with the value of S4. |
| 09 | Display at startup | N/A | 0: Counter stand-by<br>1: Counter displayed | 0 | Selects whether to display the standby state or the counter display at startup.<br>**Tips**<br>For details about screen display in the counter stand-by state, see "3.1 Power ON/OFF" on page 34. |
| 10 | ERR/ALLGO selection (I/O input/output setting) | N/A | 0: Used as ERR<br>1: Used as ALLGO | 0 | Selects whether to use the ERR or ALLGO signal as the external output function.<br>**Tips**<br>When multiple EJ Counters are linked together, all of them must have the same setting. Correct output will not be obtained if any of the EJ Counters has a different setting. |
| 11 | Channel coupling selection (I/O input/output setting) | N/A | 0: Do not couple channels<br>1: Couple channels | 0 | Selects whether to couple the 1 or 2 SEL external input signal to the EJ Counter's display channel.<br>**Tips**<br>The [SEL/CE] key also works to couple the signal. |

| No. | Set value | Per-axis setting | Set value: Operation | Default value | Description |
|---|---|---|---|---|---|
| 12 | Origin re-detection (I/O input/output setting) | N/A | 0: Disabled<br>1: Only effective for the axis that is dependent on the channel selected by 1/2 SEL.<br>2: Axis dependent on Ch. 1 and axis dependent on Ch. 2. | 0 | When setting is enabled, origin re-detection goes on stand-by when the HOLD signal (I/O input) rises. If the HOLD signal rises again while original detection is on stand-by, origin re-detection is canceled.<br>**Tips**<br>This setting affects all axes related to the specified channel. However, this does not include the axis whose channel is displaying speed.<br>Example:<br>• If the channel displaying the sum (A+B) and difference (A-B) is selected, the A-axis and B-axis are affected.<br>• If the channel displaying the B-axis coordinates is selected, the B-axis is affected. |
| 13 | Preset by I/O input (I/O input setting) | N/A | 0: Executed only for the channel selected by 1/2 SEL.<br>1: Executed for both channels. | 0 | Selects whether preset processing by external input is to be applied to just one channel or both channels. |
| 14 | Ch affected by the CLEAR signal (I/O input/output setting) | N/A | 0: Executed only for the channel selected by 1/2 SEL.<br>1: Executed for both channels. | 0 | Selects whether peak clear and error clear are to be applied to just the specified channel or to both channels. |
| 15 | Peak value preset | N/A | 0: Disabled<br>1: Enabled | 0 | Sets whether the peak value is to be set as the standard during peak mode maximum value display or minimum value display.<br>**Tips**<br>Peak value preset cannot be set during run-out display. |
| 16 | Smoothing | N/A | 0: No smoothing (update at 5 ms intervals).<br>1: The average of 16 measurements is displayed (update at 80 ms intervals).<br>2: The average of 32 measurements is displayed (update at 160 ms intervals). | 0 | Counter values are averaged to minimize flicker of the lowest-order digit. |

| No. | Set value | Per-axis setting | Set value: Operation | Default value | Description |
|---|---|---|---|---|---|
| 17 | Speed sampling cycle | N/A | 0: 10 ms<br>1: 50 ms<br>2: 100 ms | 0 | Selects the sampling interval for speed calculation. |
| 18 | Hide the lowest-order digit. | N/A | 0: Display all digits.<br>1: Hide the lowest-order digit. | 0 | Hides the lowest-order digit. However, data output to the optional interface unit includes the lowest-order digit. |
| 19 | Arbitrary ID specification | N/A | 00 to 49: ID numbers assigned automatically.<br>50 to 99: Arbitrary ID numbers assigned (ID numbers specified). | 01 | Set the ID number required when an optional interface unit is connected.<br>When arbitrary ID numbers are set in the range 50 to 99, the ID numbers set are assigned the next time the power is turned on.<br>**Tips**<br>• When 00 to 49 is set, the ID numbers can be used until the power is turned off, but are automatically assigned in the range from 01 to 08 the next time the power is turned on again.<br>• An error does not result if the same arbitrary ID is set for multiple EJ Counters that are linked together. If ID numbers are duplicated during use of the optional interface unit, a communications error results. |
| 20 | Power saving function | N/A | 00: Display always lit<br>01 to 99: Display goes out after the specified interval passes (specify the interval length in minutes). | 00 | Turning off display minimizes power consumption.<br>Specify the time that elapses between when the last key is pressed until the display goes out (01 to 99 minutes).<br>When display is turned off, press any key to turn it on again.<br>**Tips**<br>Counter operation for the axes, I/O input and output, and data communication through the optional interface unit continue even when the display is off. |
| 21 | Parameter initialization | N/A | 0: Do not initialize.<br>1: Initialize. | 0 | When this parameter is set to 1, the settings for all parameters other than number 19 (the arbitrary ID) and number 22 (the unit setting) are reset to their default values. Further, the tolerance and preset values are cleared.<br>**Tips**<br>When you set 1 and press the [SEL/CE] key, "cLEAr" is displayed and the settings are initialized. |

## 3.3.3 Effect of Parameter Changes on the A-axis and B-axis

Changing the basic parameters initializes the settings and dependent channels of the associated axes.

<table>
<tr><th colspan="2" rowspan="3">Parameter changed</th><th colspan="4">Setting initialized</th></tr>
<tr><th colspan="2">Axis-related</th><th colspan="2">Channel-related</th></tr>
<tr><th>Number display</th><th>Meaning</th><th>Counter IC</th><th>Origin</th><th>Preset state, peak value</th><th>Preset value, tolerance value</th></tr>
<tr><td>04 A</td><td>Resolution (A-axis)</td><td colspan="2">✓ (A-axis only)</td><td colspan="2">✓ (channels dependent on A-axis only)</td></tr>
<tr><td>04 B</td><td>Resolution (B-axis)</td><td colspan="2">✓ (B-axis only)</td><td colspan="2">✓ (channels dependent on B-axis only)</td></tr>
<tr><td>05</td><td>Origin function selection</td><td colspan="2">✓</td><td>✓</td><td rowspan="5">–</td></tr>
<tr><td>06 A</td><td>Counter direction (A-axis)</td><td colspan="2">✓ (A-axis only)</td><td>✓ (channels dependent on A-axis only)</td></tr>
<tr><td>06 B</td><td>Counter direction (B-axis)</td><td colspan="2">✓ (B-axis only)</td><td>✓ (channels dependent on B-axis only)</td></tr>
<tr><td>07 A</td><td>Origin detection direction (A-axis)</td><td colspan="2">✓ (A-axis only)</td><td>✓ (channels dependent on A-axis only)</td></tr>
<tr><td>07 B</td><td>Origin detection direction (B-axis)</td><td colspan="2">✓ (B-axis only)</td><td>✓ (channels dependent on B-axis only)</td></tr>
<tr><td>22</td><td>Unit</td><td colspan="2">✓</td><td>✓</td><td>✓</td></tr>
</table>

**Tips**

- Channels displaying sum and difference (A+B and A-B) are dependent on both the A-axis and B-axis.
- Since preset is not possible for the channel displaying speed, preset clear is not performed.

## 3.3.4 Effect of Changing the Display Mode

When display mode selection is changed with Parameter Number 03 and displayed content is the same before and after changing the setting, the tolerance value, preset value and preset state settings are maintained.

If the displayed content differs after the setting is changed, the tolerance, preset value, and preset state settings are re-initialized.

**Tips**

Settings are also maintained if the same content is displayed between different channels before and after setting changes. For example, if the display mode is changed from 1 to 3, the setting of display mode 1 for Ch. 1 is passed to display mode 3 for Ch. 2.

| | | | | Display mode after change | | | | | | | | | | | | | | | |
|---|---|---|---|---|---|---|---|---|---|---|---|---|---|---|---|---|---|---|---|
| | | | | 0 | | 1 | | 2 | | 3 | | 4 | | 5 | | 6 | | 7 | |
| | | | | Ch. 1 | Ch. 2 | Ch. 1 | Ch. 2 | Ch. 1 | Ch. 2 | Ch. 1 | Ch. 2 | Ch. 1 | Ch. 2 | Ch. 1 | Ch. 2 | Ch. 1 | Ch. 2 | Ch. 1 | Ch. 2 |
| | | | | A-axis coordinates | B-axis coordinates | Sum (A+B) | B-axis coordinates | Difference (A-B) | B-axis coordinates | A-axis coordinates | Sum (A+B) | A-axis coordinates | Difference (A-B) | A-axis speed | B-axis speed | A-axis coordinates | A-axis speed | B-axis coordinates | B-axis speed |
| Display mode before change | 0 | Ch. 1 | A-axis coordinates | | | | | | | ✓ | | ✓ | | | | ✓ | | | |
| | | Ch. 2 | B-axis coordinates | | | | ✓ | | ✓ | | | | | | | | | ✓ | |
| | 1 | Ch. 1 | Sum (A+B) | | | | | | | | ✓ | | | | | | | | |
| | | Ch. 2 | B-axis coordinates | | ✓ | | | | ✓ | | | | | | | | | ✓ | |
| | 2 | Ch. 1 | Difference (A-B) | | | | | | | | | | ✓ | | | | | | |
| | | Ch. 2 | B-axis coordinates | | ✓ | | ✓ | | | | | | | | | | | ✓ | |
| | 3 | Ch. 1 | A-axis coordinates | ✓ | | | | | | | | ✓ | | | | ✓ | | | |
| | | Ch. 2 | Sum (A+B) | | | ✓ | | | | | | | | | | | | | |
| | 4 | Ch. 1 | A-axis coordinates | ✓ | | | | | | ✓ | | | | | | ✓ | | | |
| | | Ch. 2 | Difference (A-B) | | | | | ✓ | | | | | | | | | | | |
| | 5 | Ch. 1 | A-axis speed | | | | | | | | | | | | | | ✓ | | |
| | | Ch. 2 | B-axis speed | | | | | | | | | | | | | | | | ✓ |
| | 6 | Ch. 1 | A-axis coordinates | ✓ | | | | | | ✓ | | ✓ | | | | | | | |
| | | Ch. 2 | A-axis speed | | | | | | | | | | | ✓ | | | | | |
| | 7 | Ch. 1 | B-axis coordinates | | ✓ | | ✓ | | ✓ | | | | | | | | | | |
| | | Ch. 2 | B-axis speed | | | | | | | | | | | | ✓ | | | | |

# 4 Data Output

4.1 I/O Function ..... 54
4.2 Data Input/Output ..... 62

# 4.1 I/O Function

By using the I/O connector, results of tolerance judgment can be output as signals, and settings of the EJ Counter can be made by external control signals.

## 4.1.1 Connector Plug

Recommended connector plug:

- Phoenix Contact connector DFMC 1,5/ 5-ST-3,5-LR - 1790519 (with lock levers, standard accessory)
- Phoenix Contact connector DFMC 1,5/ 5-STF-3,5 - 1790328 (with screw lock)

## 4.1.2 Wiring Procedure

**1 Connect the cable to the connector plug.**

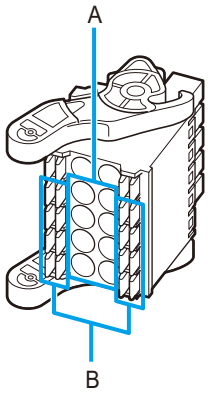


### ● When the cable is fitted with pin terminals

Push the pins all the way in to terminals A.

**Tips**

- Compatible pin terminals are those with conductive ferrule sleeves that are 10 mm in length.
  Recommended part: Phoenix Contact part number 3241129 AI 0,34-10 TQ
- Use an input/output cable with a length of less than 30 m for I/O input/output.

### ● When the cable ends in stranded wire

Slip the wire tip all the way into terminal A while using a tool such as a flat-head precision screwdriver to fully depress connector plug B, and then release the button.

Tug on the cable to make sure that the stranded wires are securely fastened to the connector plug.

## 2 Center the levers on both sides of the connector plug.

**Tips**

The levers have three discrete positions. If the levers are in the bottom-most position (A), it will be hard to plug the connector plug into the EJ Counter.

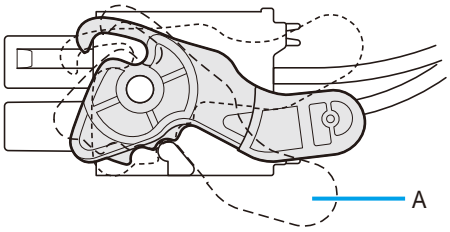


## 3 Plug the connector plug into the I/O connector on the EJ Counter.

Align the claws on the levers on the side of the connector plug with the holes on both sides of the I/O connector, and then plug the connector plug into the I/O connector on the EJ Counter.

Push the connector plug in to where its claws engage with the holes on both sides of the I/O connector and the lever won't go any further.

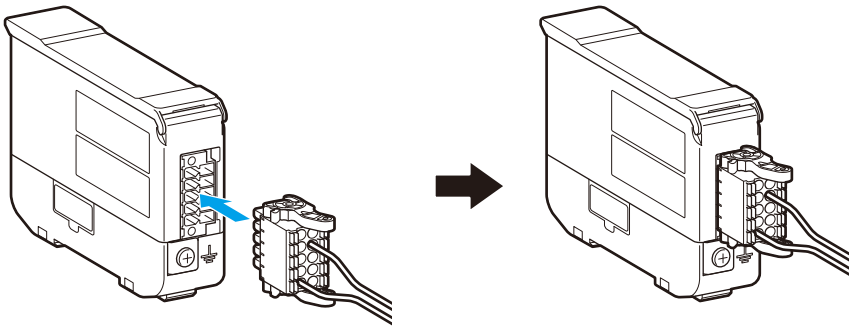

**NOTICE**

When you need to unplug the connector plug, do so by operating the levers on both sides so that the claws disengage from the EJ Counter connector and then pulling the plug out of the connector on the EJ Counter (to the left as indicated in the figure below). Forcibly pulling the connector plug out will result in damage.

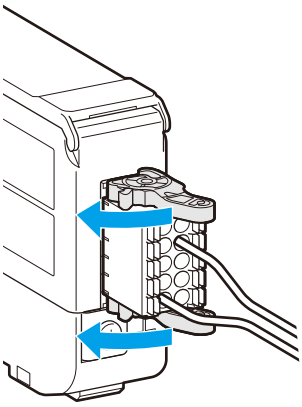

## 4.1.3 Pin Assignments

**Pin arrangement (connector built into EJ Counter)**

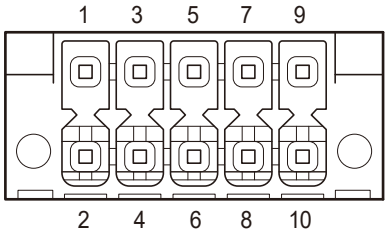


**Tips**

For details on the input/output circuit, see "4.1.4 Input/Output Circuits" on page 58.

### ■ Input

Photo coupler input (negative logic)

### ■ Output

Photo coupler collector output (negative logic)

**Tips**

Output is in the error state while setting the preset and tolerance values and while setting parameters.

| Pin number | Signal name | Signal level |
|---|---|---|
| 7 | ALLGO (when Parameter Number 10 is set to 1) | H |
| | ERR (when Parameter Number 10 is set to 0) | L |
| 8 | LT1 | L |
| 9 | LT2 | H |
| 10 | LT3 | L |

### ■ Signal

| Pin number | Signal name | IN/OUT | Functions |
|---|---|---|---|
| 1 | 10-27V DC | IN | Power source (supplied to EJ Counter from an external source)<br>Input power: 10 V—27 V, 3 A |
| 2 | GND | IN | |
| 3 | 1/2 SEL | IN | Specifies the channel for input/output signals.<br>H: Ch. 1<br>L: Ch. 2<br>**Tips**<br>• When Parameter Number 11 is set to 1, the display channel can be changed by switching between H and L.<br>• When disconnected (open), the signal level goes H. |

| Pin number | Signal name | IN/OUT | Functions |
|---|---|---|---|
| 4 | $\overline{\text{CLEAR}}$ | IN | Peak value is cleared when the signal falls. If an error has occurred, the error is cleared at the same time.<br>**Tips**<br>• The setting of Parameter Number 14 determines whether the function is applied to the channel specified by 1/2 SEL, or to both channels.<br>• Peak value is cleared even during peak mode value display.<br>• When disconnected (open), the signal level goes H. |
| 5 | $\overline{\text{HOLD}}$ | IN | When the signal falls, HOLD is applied to all channels.<br>When the signal rises, origin detection wait is switched between ON and OFF.<br>While on HOLD, the number of the selected channel (Ch.) blinks.<br>**Tips**<br>• The HOLD signal is shared by all EJ Counters that are linked together.<br>• When disconnected (open), the signal level goes H. |
| 6 | $\overline{\text{PRESET}}$ | IN | Preset is performed when the signal falls.<br>**Tips**<br>• The setting of Parameter Number 13 determines whether the function is applied to the channel specified by 1/2 SEL, or to both channels.<br>• Preset is effective even during peak mode value display.<br>• When disconnected (open), the signal level goes H. |
| 7 | $\overline{\text{ERR/ALLGO}}$ | OUT | ●When ERR output is selected<br>L: There is an error on at least one channel.<br>H: There are no errors on any channel.<br>●When ALLGO output is selected<br>L: All channels are GO or without errors.<br>H: At least one channel is NG or has an error.<br>**Tips**<br>• The setting of Parameter Number 10 determines whether ERR or ALL-GO is output.<br>• When multiple EJ Counters are linked together, the setting of Parameter Number 10 must be the same for all of them. Correct output will not be obtained if even one EJ Counter has a different setting.<br>• The range in which channels are GO is "S1 ≤ measurement result ≤ S4" for both 3-step tolerance judgment and 5-step tolerance judgment. When "measurement result < S1" or "S4 < measurement result", ERR is displayed.<br>For details, see "■ Output signals" on page 61. |

| Pin number | Signal name | IN/OUT | Functions |
|---|---|---|---|
| 8 | $\overline{LT1}$ | OUT | Outputs the tolerance judgment result for the channel specified by 1/2 SEL. Output of the various signals corresponds to the on or off state of the tolerance indicator.<br>H: The corresponding tolerance indicator is off.<br>L: The corresponding tolerance indicator in on.<br>●Correspondence between signals and tolerance indicators<br> 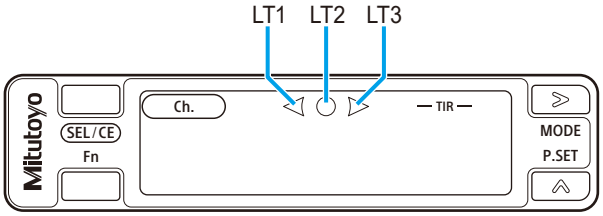 <br> |
| 9 | $\overline{LT2}$ | OUT | |
| 10 | $\overline{LT3}$ | OUT | |

## 4.1.4 Input/Output Circuits

### ■ Input circuit

Connect external resistance (Re) as needed to bring input current into the range from 5 mA to 15 mA.

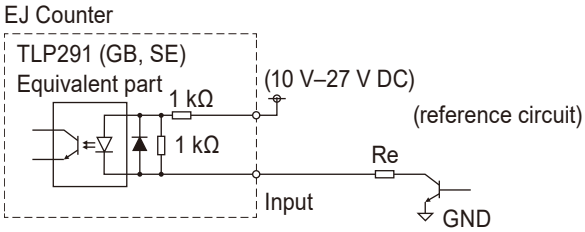


### ■ Output circuit

Adjust the output circuit current to 20 mA for use.

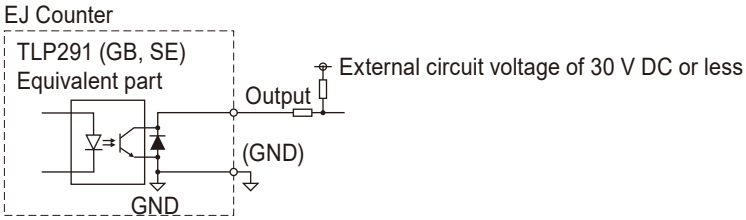


**NOTICE**

- Use shielded conductors as signal lines and connect the cable shield to frame ground. This will help minimize electromagnetic interference that could affect the product and prevent erroneous operation and possible damage.
- To protect the product from damage by inductive loads, such as relays, use protective devices such as reverse voltage prevention diodes.

## 4.1.5 Timing Chart

### ■ When power is ON

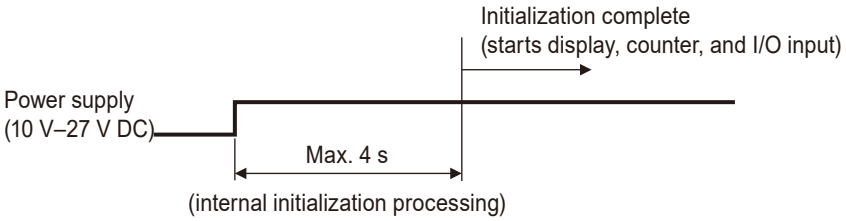


### ■ Regarding input signals (1/2 SEL, CLEAR, HOLD and PRESET)

Ensure the duration of input signals is at least 25 ms.

When inputting input signals in succession, ensure at least a 25-ms interval between one input signal and the next.

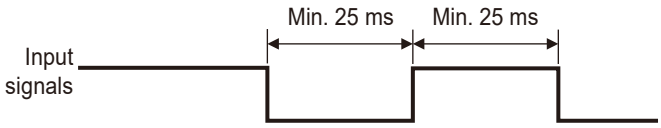


● 1/2 SEL

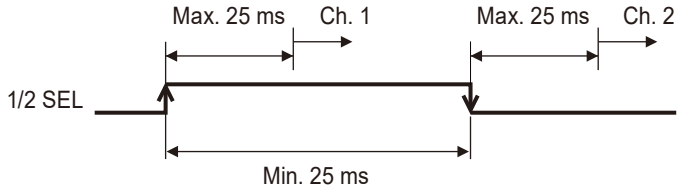


● CLEAR

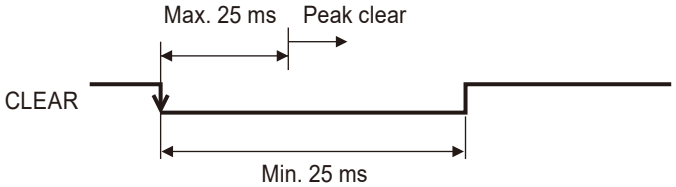


● HOLD

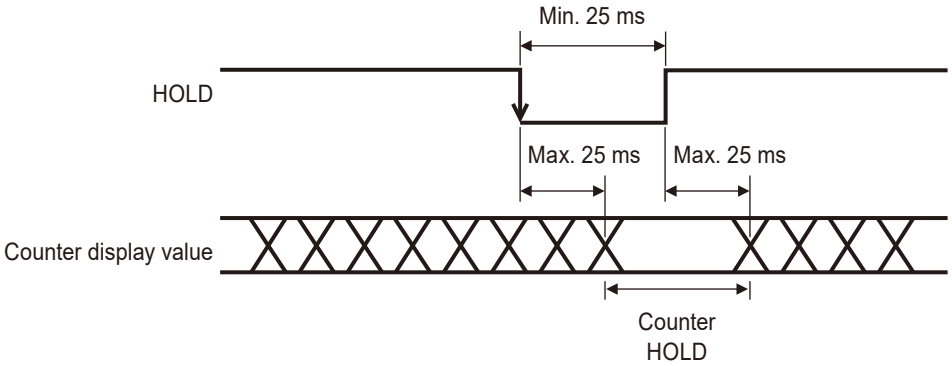

● PRESET

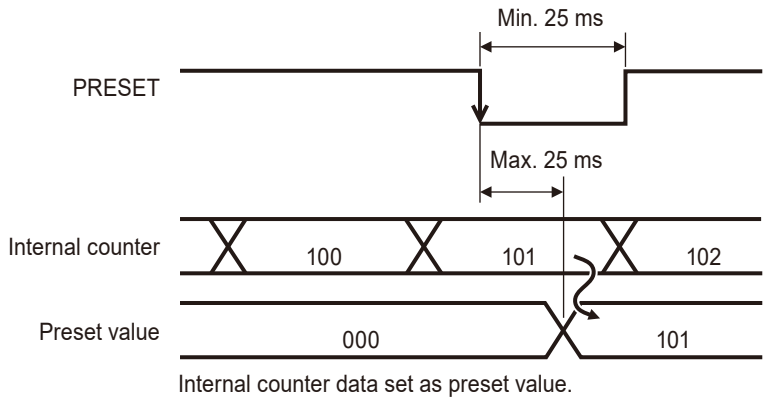


## ■ Tolerance judgment output

● 3-step tolerance

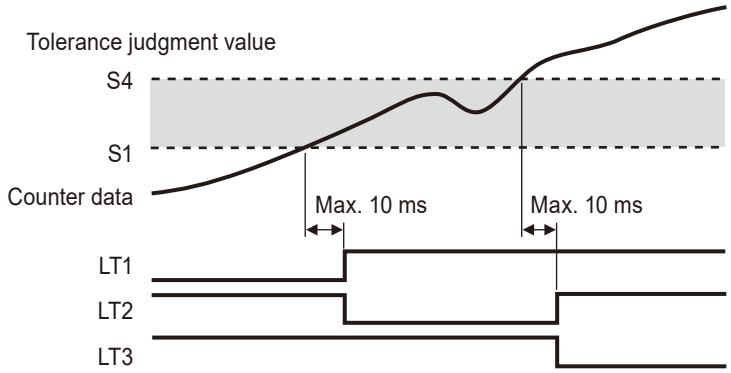


| | x < S1 | S1 ≦ x ≦S4 | S4< x |
|---|---|---|---|
| LT1 | L | H | H |
| LT2 | H | L | H |
| LT3 | H | H | L |

● 5-step tolerance

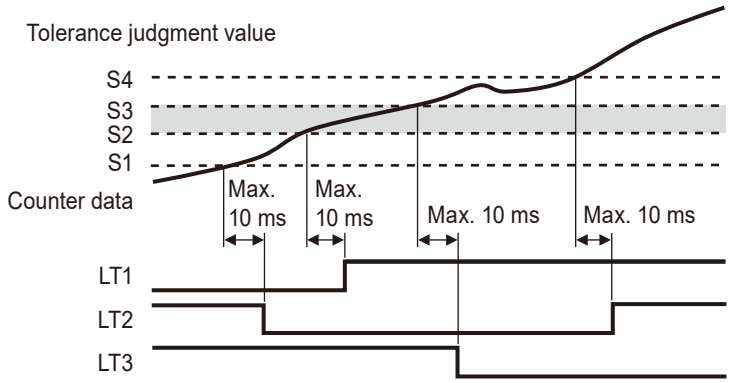


| | x < S1 | S1 ≦ x < S2 | S2 ≦ x ≦ S3 | S3 < x ≦ S4 | S4 < x |
|---|---|---|---|---|---|
| LT1 | L | L | H | H | H |
| LT2 | H | L | L | L | H |
| LT3 | H | H | H | L | L |

## ■ Output signals

### ● ALLGO

**Tips**

- When both 3-step tolerance judgment and 5-step tolerance are selected, the range in which channels are GO is "S1 ≤ measurement result ≤ S4".
- When using multiple EJ Counters that are linked together, the tolerance judgment will be handled as "GO" for any EJ Counter for which tolerance judgment is set to "None" (Parameter Number 8 is set to 2).

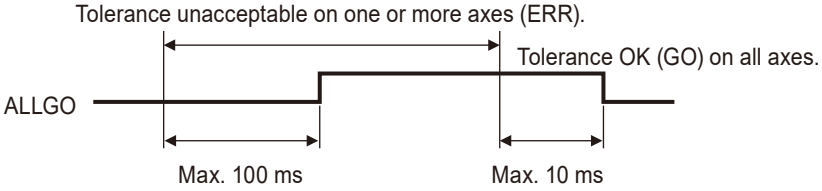


3-step tolerance value setting

| Judgment conditions | ERR/GO Judgment |
|---|---|
| Measurement result < S1 | ERR |
| S1 ≤ measurement result ≤ S4 | GO |
| S4 < measurement result | ERR |

5-step tolerance value setting

| Judgment conditions | ERR/GO Judgment |
|---|---|
| Measurement result < S1 | ERR |
| S1 ≤ measurement result < S2 | GO |
| S2 ≤ measurement result ≤ S3 | GO |
| S3 < measurement result ≤ S4 | GO |
| S4 < measurement result | ERR |

### ● Error output

**Tips**

For details about error message contents, see "5.2 Error Messages" on page 66.

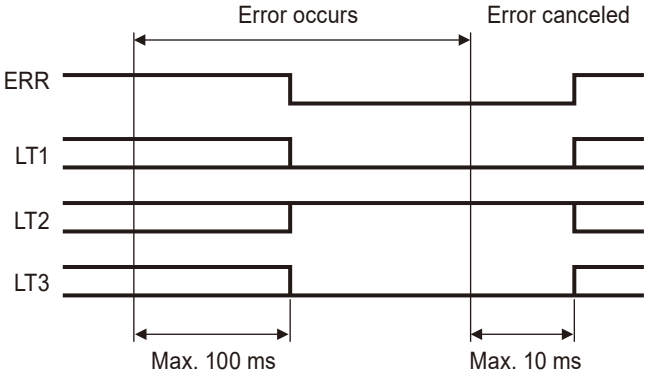

# 4.2 Data Input/Output

External data input/output is possible through the optional interface unit.
Data that can be input/output through interface units are as follows.

| Interface Unit | Format | Possible data I/O | |
|---|---|---|---|
| | | Output | Input |
| CC-Link<br>(Part No. 21HZA186) | CC-Link V1.10 | Tolerance judgment result (by channel, All)<br>Gage connection status | Current value data |
| | CC-link V2.00 | Current value data (by channel)<br>Tolerance judgment result (by channel, All)<br>Gage connection status | Current value data |
| PROFINET<br>(Part No. 21HZA187) | PROFINET RT<br>(RT Class 1) | Current value data (by channel)<br>Tolerance judgment result (by channel, All)<br>Gage connection status | Current value data |
| EtherNet/IP<br>(Part No. 21HZA188) | EtherNet/IP | | |
| EtherCAT<br>(Part No. 21HZA264) | EtherCAT | | |
| USB<br>(Part No. 21HZA149)<br>Common to all of the following models<br>CC-Link<br>(Part No. 21HZA186)<br>PROFINET<br>(Part No. 21HZA187)<br>EtherNet/IP<br>(Part No. 21HZA188)<br>EtherCAT<br>(Part No. 21HZA264) | USB2.0 FS<br>(12 Mbps) | Current value (by channel)<br>Preset value (by channel)<br>Tolerance value (by channel)<br>Errors<br>(by channel and by counter)<br>Parameter setting values (by counter)<br>Number of counters connected<br>Counter ID | Preset value (by channel)<br>Tolerance value (by channel)<br>Peak mode selection (by channel)<br>Preset and zero set (by channel)<br>HOLD set/clear (by counter)<br>Peak clear (by counter)<br>Error clear (by counter)<br>Parameter settings (by counter) |

**Tips**

For details, see 📖 the separate "Interface Unit User's Manual".

# 5 Troubleshooting

5.1 Troubleshooting ..... 64
5.2 Error Messages ..... 66

# 5.1 Troubleshooting

When this product does not operate as expected, refer to the cause of the trouble and the solutions shown below:

| Problem | Cause | Solution |
|---|---|---|
| Power does not go on. | Connector plug is improperly connected. | Power is not supplied to the correct pins.<br>**Tips**<br>For details, see "2.3.2 DC Power Supply Connection" on page 29 and "2.3.3 Connecting the AC Adapter (Optional)" on page 31. |
| | The linkage connector of the counter or interface unit is defective | Replace the defective counter or interface unit with a good one. |
| Unit from the middle of daisy chain does not power on. | One of the daisy chain is not properly connected. | Disconnect the first unit that won't power on from the last unit that does power on, and then reconnect the units. |
| | The linkage connector is defective on either the unit that will power on, the unit that won't power on, or both. | Replace the defective unit with a good one. |
| Only one unit in the daisy chain does not power on. | The unit in question is defective. | Replace the defective unit with a good one. |
| The counter value is incorrect (not counting). | Parameters are not correctly set for the type of the Linear Gage, etc. | Set correct parameters.<br>**Tips**<br>For details, see "3.3 Parameter Setting" on page 43. |
| | Peak mode is set to maximum value, minimum value or run-out width. | Set the peak mode to current value display.<br>**Tips**<br>For details, see "3.2.3 Peak Hold" on page 38. |
| | The HOLD signal is being input. | Check the external input. |
| Cannot execute Zero setting. | The preset value is set to something other than 0. | Do preset with the preset value set to 0.<br>**Tips**<br>For details, see "3.2.2 Preset" on page 36. |
| Linear Gage cannot be connected. | You are trying to connect a Linear Gage with 6-pin or 8-pin connector. | Use the optional adapter cable.<br>**Tips**<br>For details, see "6.3 Options" on page 73. |
| | You are trying to connect a Linear Gage that does not support differential square wave output. | The EJ Counter can only be connected to a Linear Gage that provides differential square wave output. Other Linear Gages can be used in combination with the EC Counter or EH Counter. |

| Problem | Cause | Solution |
|---|---|---|
| The tolerance indicator display continues showing ◀ ◯ ▶. | An error has occurred. | Change the display channel and clear the error.<br>**Tips**<br>For details, see "5.2.1 Error State Indication" on page 66 and "5.2.2 How to Clear Errors" on page 66. |
| The numeric display shows "-.-.-.-.-.-.- -" (the periods are flashing) uninterruptedly. | The Linear Gage is in origin detection mode. | Indicates the origin detection wait state.<br>When the connected Linear Gage with origin mark is operated, the origin is acquired and then display switches to counter display. |
| Numerical display flickers. | Electromagnetic interference has occurred due to static electricity, or noise from the power line. | Although the numerical value flickers temporarily, it will be displayed normally after the influence of static electricity disappears.<br>For details, see "2.3.2 DC Power Supply Connection" on page 29". |

# 5.2 Error Messages

## 5.2.1 Error State Indication

Regardless of the tolerance judgment setting, if an error occurs, the left and right tolerance indicators light and the center indicator goes off (◀ ◯ ▶).

The numeric display shows the error number related to the selected channel.

## 5.2.2 How to Clear Errors

To clear the error, use either of the following methods.

- Press the product's [Fn] key together with the [SEL/CE] key.
- Input the CLEAR signal (I/O input).
- Clear the error by external input through the interface unit (optional).

**Tips**

- In case of error on the channel not selected, the tolerance indicator indicates the error.
- In case of multiple errors, clearing the one that is displayed will cause the uncleared error to be displayed instead.
- Errors can be only be cleared by key operation for the channel that is currently displayed. Errors on channels that are not displayed cannot be cleared.
  If the tolerance indicator continues displaying errors even though errors have been cleared for the displayed channel, check by changing the display channel.
  For details on changing display channels, see "3.2.1 Switching the Display Channel (Ch.)" on page 35.
- Errors can only be cleared by I/O input for the channel specified by the 1/2 SEL signal. Errors on channels that are not specified by the 1/2 SEL signal cannot be cleared.
  If the tolerance indicator continues displaying errors even though errors have been cleared for the specified channel, check by changing the specified channel.
- All errors can be cleared with error clear operation by external input through the interface unit.
- Display of errors on by the numeric display is dependent on the Ch. 1 and Ch. 2 display content specified by the display mode selected for Parameter Number 03.
  When a channel is displaying the coordinates and speed of the A-axis, only A-axis errors are displayed; B-axis errors are not displayed.
  When a channel is displaying the coordinates and speed of the B-axis, only B-axis errors are displayed; A-axis errors are not displayed.
  For a channel displaying sum/difference of the A-axis and B-axis, errors of both axes are displayed.

## 5.2.3 Error List

| Display | Interface unit output | I/O output | Cause | Solution |
|---|---|---|---|---|
| Error 10 | Yes | Yes | Abnormal power voltage<br>(Voltage is outside of the range from 10 V through 27 V.) | Make connection to a power supply of suitable voltage, and then do the error clear operation. |
| Error 12 | Yes | Yes | Internal memory abnormality<br>(data abnormality) | Do the error clear operation.<br>**Tips**<br>If the error cannot be cleared, there may be an internal malfunction. Contact a Mitutoyo sales office. |
| Error 13 | Yes | Yes | Internal memory abnormality<br>(access abnormality) | Do the error clear operation. If the error cannot be cleared, cycle the power off and on.<br>**Tips**<br>If the error cannot be cleared, there may be an internal malfunction. Contact a Mitutoyo sales office. |
| --------- | Yes<br>(Error15) | Yes | Counter stand-by state after power-on | Change to the counter display screen with the [SEL/CE] key.<br>**Tips**<br>When Parameter Number 09 is set to 1 (counter display), this error is not displayed. |
| | | | Origin not acquired | Do the error clear operation. |
| | | | Power supply interruption | Verify power supply connection, and then do the error clear operation. |
| Error 20 | Yes | Yes | Excess speed | Verify measurement conditions (such as plunger movement speed), and then do the error clear operation. |
| Error 30 | Yes | Yes | Counter value overflow | After doing error clear operation, check positioning of the measurement work and plunger, verify the preset values of the product, and then set presets again.<br>**Tips**<br>• Presets are cleared automatically.<br>• The origin is not acquired. |
| Error 40 | Yes | Yes | Linear Gage disconnection detected (other than origin signal), or excess speed | Verify connection of the Linear Gage. After making proper connection, do the error clear operation.<br>Verify measurement conditions (such as plunger movement speed).<br>If the error cannot be cleared, there may be a discontinuity in the cable.<br>Contact a Mitutoyo sales office. |

| Display | Interface unit output | I/O output | Cause | Solution |
|---|---|---|---|---|
| Error 41 | Yes | Yes | No origin signal | When using a Linear Gage with origin mark, check whether the origin signal is disconnected.<br>When using a Linear Gage without origin mark, such as an INC model, set Parameter Number 05 to 0.<br>**Tips**<br>For details about Parameter Number 05, see "3.3.2 List of Parameters" on page 45. |
| Error 60 | Yes | Yes | More than eight EJ Counters are linked together. | Turn the power back on after reducing the number of linked EJ Counters to no more than eight.<br>**Tips**<br>When multiple counters are linked together, errors are displayed by the two end counters. |
| Error 80 | Yes | Yes | Peak detection error | Verify measurement conditions (such as plunger movement speed), and then do the error clear operation. |
| Error 81 | Yes | Yes | Counter IC reset error | Occurred because a Linear Gage was connected or removed during operation.<br>Do the error clear operation. |
| Error 85 | Yes | Yes | Counter IC overflow | Electrical noise could be a problem.<br>Do the error clear operation. |
| Error 90 | Yes | Yes | Tolerance value setting error | The tolerance value is not set correctly.<br>With 3-step tolerance judgment:<br>The condition S1 ≤ S4 is not satisfied.<br>With 5-step tolerance judgment:<br>The condition S1 ≤ S2 ≤ S3 ≤ S4 is not satisfied.<br>Press the [SEL/CE] key together with the [Fn] key to return to preset/tolerance value setting and reset the tolerance value. |
| Error 95 | No | No | A key was operated with key protect enabled. | Set Parameter Number 01 to 0 (no key protect).<br>**Tips**<br>For details about Parameter Number 01, see "3.3.2 List of Parameters" on page 45. |

# 6 Specifications

6.1 Basic Specifications ..... 70
6.2 Outline Dimensional Drawing ..... 71
6.3 Options ..... 73

# 6.1 Basic Specifications

| | | | | |
|---|---|---|---|---|
| **Code No.** | | 542-080 | 542-081 | |
| **Model No.** | | EJ-102N | EJ-102NE | |
| **Unit of display** | | mm | mm/in | |
| **Display resolution (varies according to connected Linear Gage)**<br>*1: Display range | | 0.005 mm (5 μm)<br>±19999.995*1 | 0.005 mm (5 μm)<br>±19999.995*1 | 0.0002 in<br>±199.9998*1 |
| | | 0.001 mm (1 μm)<br>±19999.999*1 | 0.001 mm (1 μm)<br>±19999.999*1 | 0.00005 in<br>±199.99995*1 |
| | | 0.0005 mm (0.5 μm)<br>±9999.9995*1 | 0.0005 mm (0.5 μm)<br>±9999.9995*1 | 0.00002 in<br>±199.99998*1 |
| | | 0.0001 mm (0.1 μm)<br>±9999.9999*1 | 0.0001 mm (0.1 μm)<br>±9999.9999*1 | 0.000005 in<br>±99.999995*1 |
| **Number of Linear Gage connection ports** | | 2 | | |
| **Supported gage signals** | | Differential square wave, differential square wave with origin | | |
| **Input response frequency** | | 5 MHz | | |
| **Supported Linear Gages** | | For details, see "1.3 Supported Linear Gages" on page 14<br>(optional adapter cable required depending on Linear Gage type) | | |
| **User interface** | **Display** | Minus sign + 8 digits and indicators<br>(displays one axis, manually selectable) | | |
| | **Number of keys** | 4 | | |
| **External input/output** | **Number of I/O ports** | Input ports: 4<br>Output ports: 4 | | |
| | **Applicable communications standards** | CC-Link, USB, PROFINET, EtherNet/IP, EtherCAT<br>(supported by optional interface unit) | | |
| **Maximum number of units linked together** | | Eight EJ Counters + one interface unit (optional)<br>(maximum number of Linear Gages that can be connected: 16) | | |
| **Power supply specifications** | **Input voltage** | 10 V–27 V DC | | |
| | **Maximum power consumption** | Single EJ Counter: 3 W or less (including two Linear Gages)<br>With maximum number of linked EJ Counters: 30 W or less (including interface unit and 16 Linear Gages) | | |
| **Operating temperature (humidity) range** | | 0 °C–50 °C (20% RH–80% RH, without condensation) | | |
| **Storage temperature (humidity) range** | | -10 °C–60 °C (20% RH–80% RH, without condensation) | | |
| **Unit mass** | | Approx. 120 g (0.26lb) | | |
| **CE marking/UKCA marking** | | EMC Directive/Electromagnetic Compatibility Regulations:<br>EN IEC 61326-1<br>Immunity test requirements: Clause 6.2 Table 2<br>Emission limit: Class A<br>RoHS Directive/The Restriction of the Use of Certain Hazardous Substances in Electrical and Electronic Equipment Regulations:<br>EN IEC 63000 | | |

# 6.2 Outline Dimensional Drawing

Unit: mm

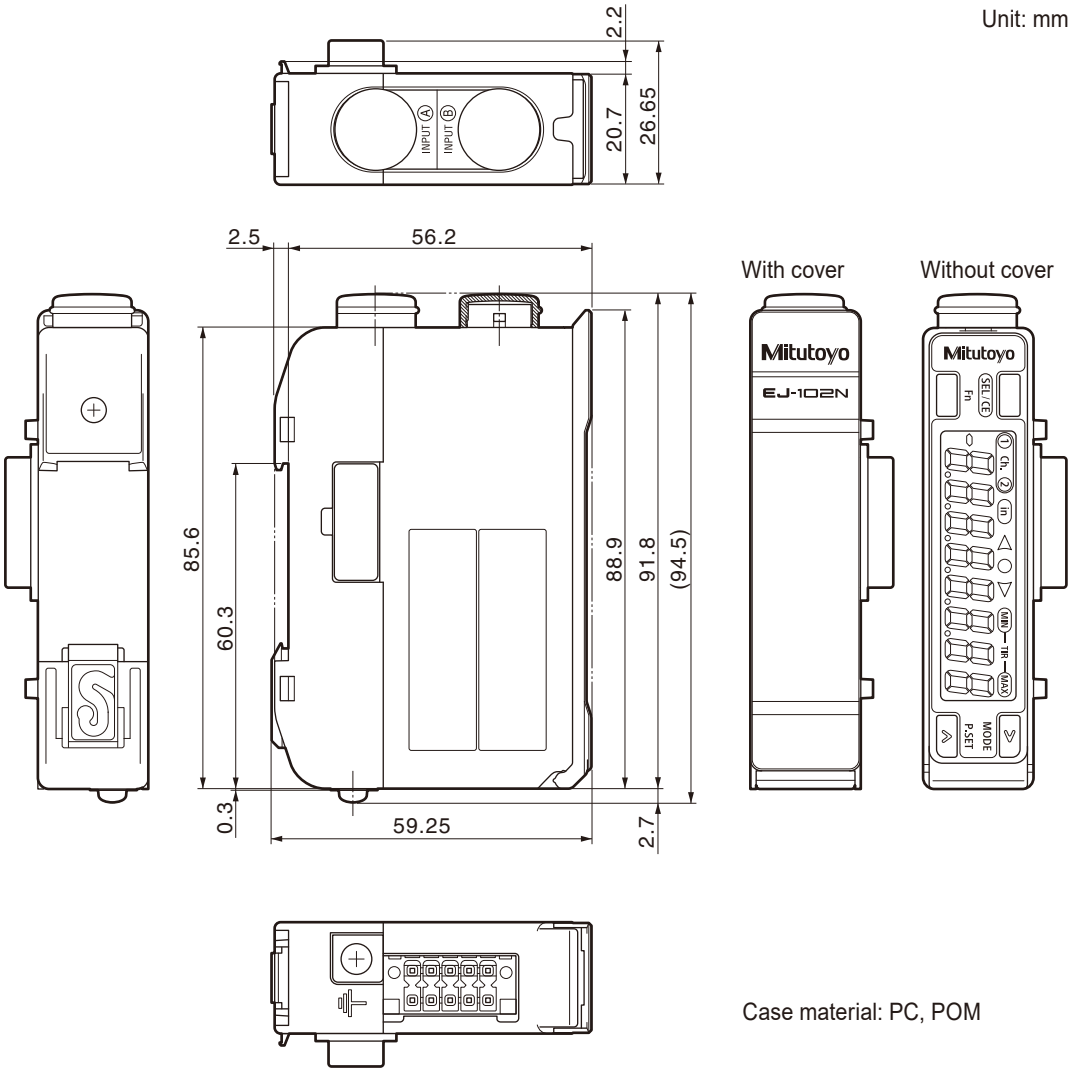


Case material: PC, POM

Unit: mm

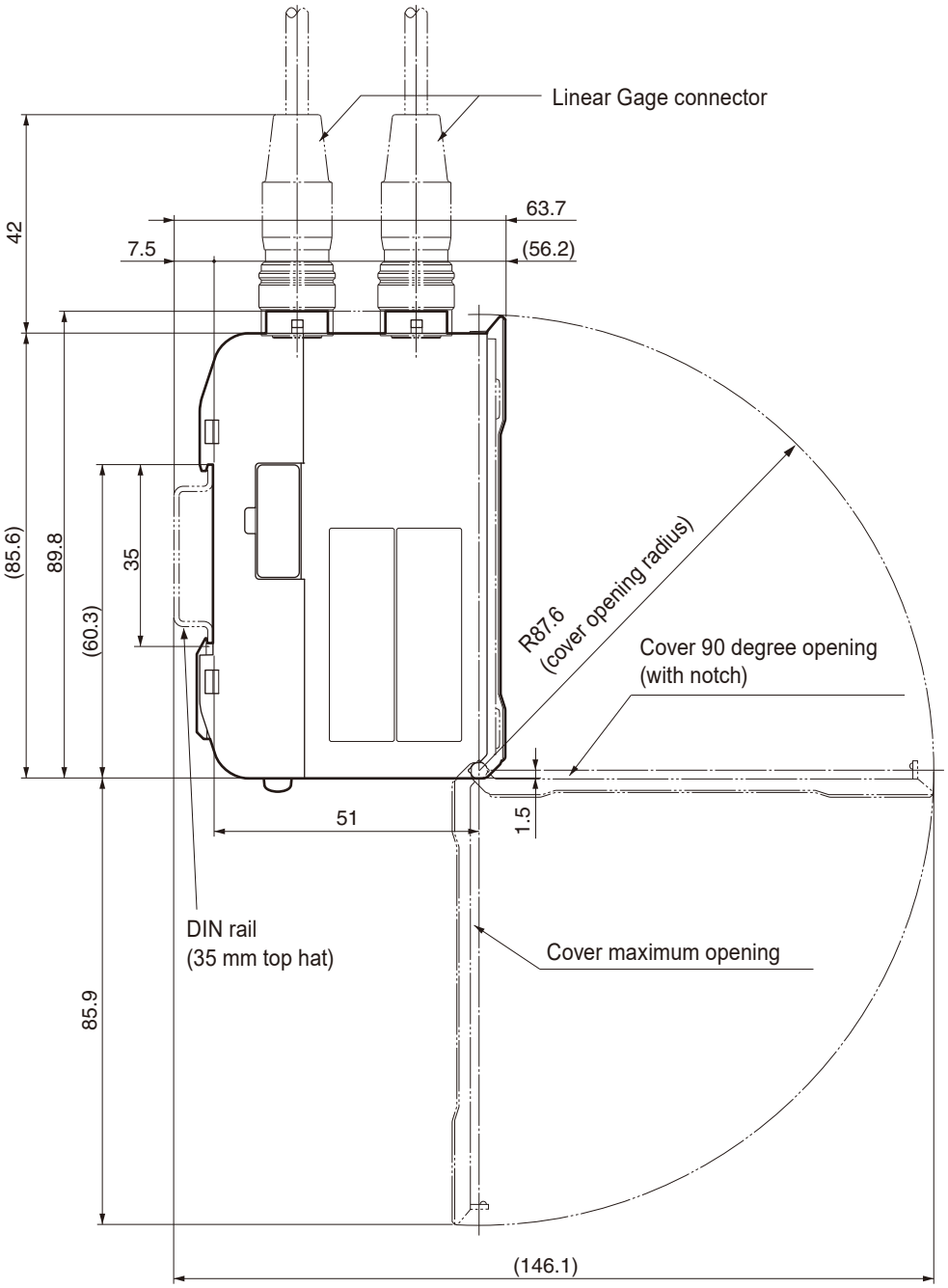
Linear Gage connector
42
7.5
63.7
(56.2)
(85.6)
89.8
35
(60.3)
R87.6
(cover opening radius)
Cover 90 degree opening
(with notch)
51
1.5
DIN rail
(35 mm top hat)
Cover maximum opening
85.9
(146.1)

# 6.3 Options

| Part No. | Name |
|---|---|
| 21HZA157 | DIN rail fixing bracket |
| 21HZA186 | Interface Unit CC-Link |
| 21HZA149 | Interface Unit USB |
| 21HZA187 | Interface Unit PROFINET |
| 21HZA188 | Interface Unit EtherNet/IP |
| 21HZA264 | Interface Unit EtherCAT |
| 21HZA193 | Connector adapter cable (for P gages)<br>(for Linear Gages with 6-pin connector)<br> 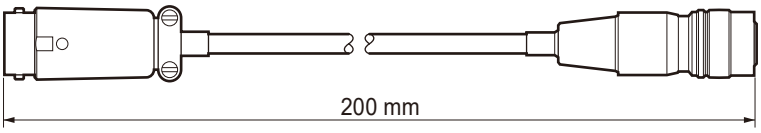 <br> |
| 21HZA194 | Connector adapter cable (for Z gages)<br>(for Linear Gages with 8-pin connector)<br> 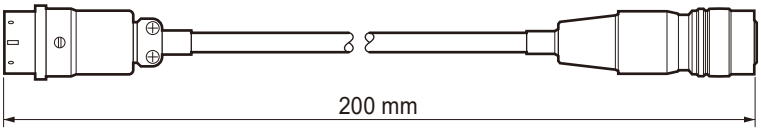 <br> |
| 21HZA209 | DC jack with pin terminals |
| 357651 | AC adapter (12 V DC, 4.1 A) |
| 02ZAA000 | AC cable (Japanese type) |
| 02ZAA010 | AC cable (UL, CSA, US type) |
| 02ZAA020 | AC cable (CEE, European type) |
| 02ZAA030 | AC cable (BS, UK type) |
| 02ZAA040 | AC cable (CCC compliant: S type, Chinese type) |
| 02ZAA050 | AC cable (P-023+IS14, Korean type) |

# SERVICE NETWORK

*As of May 2025

## Europe

**Mitutoyo Europe GmbH**
Borsigstrasse 8-10, 41469 Neuss, GERMANY
TEL: 49 (0)2137 102-0 FAX: 49 (0)2137 102-351

**Mitutoyo CTL Germany GmbH**
Von-Gunzert-Strasse 17, 78727 Oberndorf, GERMANY
TEL: 49 (0)7423 8776-0 FAX: 49 (0)7423 8776-99

**KOMEG Industrielle Messtechnik GmbH**
Zum Wasserwerk 3, 66333 Völklingen, GERMANY
TEL: 49 (0)6898 91110 FAX: 49 (0)6898 9111100

## Germany

**Mitutoyo Deutschland GmbH**
Borsigstrasse 8-10, 41469 Neuss, GERMANY
TEL: 49 (0)2137 102-0 FAX: 49 (0)2137 86 85

**M³ Solution Center Hamburg**
Tempowerkring 9·im HIT-Technologiepark 21079 Hamburg, GERMANY
TEL: 49 (0)40 791894-0 FAX: 49 (0)40 791894-50

**M³ Solution Center Berlin**
Ernst-Lau-Straße 6, 12489 Berlin, GERMANY
TEL:49(0)30 2611 267 FAX: 49 30 67988729

**M³ Solution Center Eisenach**
Neue Wiese 4, 99817 Eisenach,GERMANY
TEL: 49 (0)3691 88909-0 FAX: 49 (0)3691 88909-9

**M³ Solution Center Ingolstadt**
Marie-Curie-Strasse 1A, 85055 Ingolstadt, GERMANY
TEL: 49 (0)841 954920 FAX: 49 (0)841 9549250

**M³ Solution Center Leonberg**
Am Längenbühl 3, 71229 Leonberg, GERMANY
TEL: 49 (0)7152 6080-0 FAX: 49 (0)7152 608060

**Mitutoyo Deutschland GmbH - Small Tool Sales Division**
Am Längenbühl 4, 71229 Leonberg, GERMANY
TEL: 49 (0)7152 9237-0 FAX: 49 (0)7152 9237-29

## U.K.

**Mitutoyo (UK) Ltd. HQ**
Joule Road, West Point Business Park,
Andover, Hampshire SP10 3UX, UNITED KINGDOM
TEL: 44 (0)1264 353123 FAX: 44 (0)1264 354883

**Coventry M³ Solution Centre**
Unit6, Banner Park, Wickmans Drive, Coventry,
West Midlands CV4 9XA, UNITED KINGDOM
TEL: 44 (0)2476 426300

**Halifax M³ Solution Centre**
Lowfields Business Park, Navigation Close, Elland,
West Yorkshire HX5 9HB, UNITED KINGDOM
TEL: 44 (0)1422 375566

**East Kilbride M³ Solution Centre**
The Bairds Building, Rankine Avenue, Scottish Enterprise Technology Park, East Kilbride G75 0QF, UNITED KINGDOM
TEL: 44 (0)1355 581170

## France

**Mitutoyo France**
Paris Nord 2-123 rue de la Belle Etoile, BP 59267 ROISSY EN FRANCE 95957 ROISSY CDG CEDEX, FRANCE
TEL: 33 (0)149 38 35 00

**M³ Solution Center LYON**
Parc Mail 523, cours du 3ème millénaire, 69791 Saint-Priest, FRANCE
TEL: 33 (0)149 38 35 70

**M³ Solution Center STRASBOURG**
Parc de la porte Sud, Rue du pont du péage, 67118 Geispolsheim, FRANCE
TEL: 33 (0)149 38 35 80

**M³ Solution Center CLUSES**
290 Avenue des Lacs, 74950 Scionzier, FRANCE
TEL: 33 (0)1 49 38 35 90

**M³ Solution Center TOULOUSE**
Aeroparc Saint Martin Cellule B08 ZAC de Saint Martin du Touch 12 rue de Caulet 31300 Toulouse, FRANCE
TEL: 33 (0)1 49 38 42 90

**M³ Solution Center RENNES**
2, rue Claude Chappe, PA le Vallon - ZAC Mivoie, 35230 Noyal-Châtillon-sur-Seiche, FRANCE
TEL: 33 (0)1 49 38 42 10

**Italy**

**Mitutoyo Italiana S.r.l.**
Corso Europa, 7 - 20045 Lainate (MI), ITALY
TEL: 39 02 935781 FAX: 39 02 93578255

**M³ Solution Center BOLOGNA**
Via Stalingrado 67/22D 40128 Bologna, ITALY
TEL: 39 02 93578215

**M³ Solution Center CHIETI**
Contrada Santa Calcagna - 66020 Rocca S. Giovanni (CH), ITALY
TEL: 39 02 93578280 FAX: 39 02 93578255

**M³ Solution Center PADOVA**
Via G. Galilei 21/F - 35035 Mestrino (PD), ITALY
TEL: 39 02 93578268 FAX: 39 02 93578255

**Netherlands**

**Mitutoyo Nederland B.V.**
Storkstraat 30, 3905 KX Veenendaal, THE NETHERLANDS
TEL: 31(0)318-534911

**Mitutoyo Nederland B.V. / M³ Solution Center Enschede**
Institutenweg 50, 7521 PK Enschede, THE NETHERLANDS
TEL: 31(0)318-534911

**Mitutoyo Nederland B.V. / M³ Solution Center Eindhoven**
De Run 1115, 5503 LB Veldhoven, THE NETHERLANDS
TEL: 31(0)318-534911

**Mitutoyo Research Center Europe B.V.**
De Rijn 18, 5684 PJ Best, THE NETHERLANDS
TEL:31(0)499-320200 FAX:31(0)499-320299

**Belgium**

**Mitutoyo Belgium N.V. / M³ Solution Center Melsele**
Schaarbeekstraat 20, B-9120 Melsele, BELGIUM
TEL: 32 (0)3-2540444

**Sweden**

**Mitutoyo Scandinavia AB**
Släntvägen 6, 194 61 Upplands Väsby, SWEDEN
TEL: 46 (0)8 594 109 50

**Mitutoyo Scandinavia AB / M³ Solution Center Alingsås**
Ängsvaktaregatan 3A, 441 38 Alingsås, SWEDEN
TEL: 46 (0)8 594 109 50

**Mitutoyo Scandinavia AB / M³ Solution Center Värnamo**
Kalkstensvägen 7, 331 44 Värnamo, SWEDEN
TEL: 46 (0)8 594 109 50

**Switzerland**

**Mitutoyo (Schweiz) AG**
Steinackerstrasse 35, 8902 Urdorf, SWITZERLAND
TEL: 41 (0)447361150

**Mitutoyo (Suisse) SA**
Rue Galilée 4, 1400 Yverdon-les Bains, SWITZERLAND
TEL: 41 (0)244259422

**Poland**

**Mitutoyo Polska Sp.z o.o.**
Skrzypowa 1, 54-530 Wrocław, POLAND
TEL: 48 (0)71354 83 50 FAX: 48 (0)71354 83 55

**Czech Republic**

**Mitutoyo Česko s.r.o.**
Dubská 1626, 415 01 Teplice, CZECH REPUBLIC
TEL: 420 417-514-011 Email: info@mitutoyo.cz

**Mitutoyo Česko s.r.o. M³ Solution Center Ivančice**
Ke Karlovu 62/10, 664 91 Ivančice, CZECH REPUBLIC
TEL: 420 417-514-011 Email: info@mitutoyo.cz

**Mitutoyo Česko s.r.o. M³ Solution Center Ostrava Mošnov**
Mošnov 314, 742 51 Mošnov, CZECH REPUBLIC
TEL: 420 417-514-050 Email: info@mitutoyo.cz

**Mitutoyo Česko s.r.o. Slovakia Branch**
Šoltésovej 346/1, 017 01 Považská Bystrica, SLOVAKIA
TEL: 421 948-595-590 Email: info@mitutoyo.sk

**Hungary**

**Mitutoyo Hungária Kft.**
Galamb József utca 9, 2000 Szentendre, HUNGARY
TEL: 36 (30) 6410210

**Romania**

**Mitutoyo Romania SRL**
1A Drumul Garii Odai Street, showroom, Ground Floor, 075100 OTOPENI-ILFOV, ROMANIA
TEL: 40 (0)311012088 FAX: +40 (0)311012089

**Showroom in Brasov**
Strada Ionescu Crum Nr.1, Brasov Business Park Turnul 1, Mezanin, 500446 Brasov-Judetul Brasov, ROMANIA
TEL/FAX: 40 (0)371020017

**Finland**

**Mitutoyo Scandinavia AB Finnish Branch**

Autokeskuksentie 16B, 33960 Pirkkala, FINLAND

TEL: 358 (0)40 355 8498

**Austria**

**Mitutoyo Austria GmbH**

Salzburger Straße 260/2 und 260/3, 4600 Wels, AUSTRIA

TEL: 43 (0)7242 219 998

**Mitutoyo Austria GmbH Goetzis Regional showroom**

Lastenstrasse 48a, 6840 Götzis, AUSTRIA

**Singapore**

**Mitutoyo Asia Pacific Pte. Ltd.**

**Head office / M³ Solution Center**

24 Kallang Avenue, Mitutoyo Building, SINGAPORE 339415

TEL:(65)62942211 FAX:(65)62996666

**Malaysia**

**Mitutoyo (Malaysia) Sdn. Bhd.**

**Kuala Lumpur Head Office / M³ Solution Center**

Mah Sing Integrated Industrial Park, 4, Jalan Utarid U5/14, Section U5, 40150 Shah Alam, Selangor, MALAYSIA

TEL:(60)3-78459318 FAX:(60)3-78459346

**Penang Branch office / M³ Solution Center**

30, Persiaran Mahsuri 1/2, Sunway Tunas, 11900 Bayan Lepas, Penang, MALAYSIA

TEL:(60)4-6411998 FAX:(60)4-6412998

**Johor Branch office / M³ Solution Center**

70 (Ground Floor), Jalan Molek 1/28, Taman Molek, 81100 Johor Bahru, Johor, MALAYSIA

TEL:(60)7-3521626 FAX:(60)7-3521628

**Thailand**

**Mitutoyo (Thailand) Co., Ltd.**

**Bangkok Head Office / M³ Solution Center**

2327 Onnut Road Kwaeng Onnut Khet Suanluang Bangkok 10250, THAILAND

TEL:(66)2080 3500

**Chonburi Branch / M³ Solution Center**

7/1, Moo 3, Tambon Bowin, Amphur Sriracha, Chonburi 20230, THAILAND

TEL:(66)2080 3563 FAX:(66)3834 5788

**ACC Branch / M³ Solution Center**

122/8, 122/9, Moo 6, Tambon Donhuaroh, Amphur Muangchonburi, Chonburi 20000, THAILAND

TEL:(66)2080 3565

**Indonesia**

**PT. Mitutoyo Indonesia**

**Head Office / M³ Solution Center**

Jalan Sriwijaya No.26 Desa cibatu Kec. Cikarang Selatan Kab. Bekasi 17530, INDONESIA

TEL: (62)21-2962 8600 FAX: (62)21-2962 8604

**Batam Branch Office**

Business Center Adhya Building 3rd Floor Kompleks Permata Niaga Blok A No. 1, Jalan jendral Sudirman Kelurahan Sukajadi, Kecamatan Batam Kota, Kepulauan Riau 29444, INDONESIA

TEL: (62)-778-4888000

**Vietnam**

**Mitutoyo Vietnam Co., Ltd**

**Hanoi Head Office / M³ Solution Center**

1st & 2nd floor, MHDI Building, No. 60 Hoang Quoc Viet Road, Nghia Do Ward, Cau Giay District, Hanoi, VIETNAM

TEL:(84)24-3768-8963 FAX:(84)24-3768-8960

**Ho Chi Minh City Branch Office / M³ Solution Center**

Unit No. B-00.07, Ground Floor, C1 Building, No. 6, Street D9, An Loi Dong Ward, Thu Duc City, Ho Chi Minh City, VIETNAM

TEL:(84)28-3840-3489 FAX:(84)28-3840-3498

**Hai Phong City Branch Office**

Room 511, 5th Floor, Thanh Dat 3 Building, No. 4 Le Thanh Tong Street, May To Ward, Ngo Quyen District, Hai Phong City, VIETNAM

TEL:(84)22-5398-9909

**Philippines**

**Mitutoyo Philippines, Inc.**

**Head Office / M³ Solution Center**

Unit 1B & 2B LTI, Administration Building 1, Annex 1, North Main Avenue, Laguna Technopark, Binan Laguna 4024, PHILIPPINES

TEL/FAX:(63) 49 544 0272

**India**

**Mitutoyo South Asia Pvt. Ltd. Head Office**

C-122, Okhla Industrial Area, Phase-I, New Delhi-110 020, INDIA

TEL: (91) 11-40578485/86

**MSA Technical Center**

Plot no. 65, Ground Floor, Udyog Vihar, Phase-4 Gurgaon, Haryana - 122016, INDIA

TEL : (91) 124–2340286/287

**Mumbai Region Head office**

303, Sentinel Hiranandani Business Park Powai, Mumbai-400 076, INDIA

TEL: (91) 22-25700684/685/837/839

**Pune Office / M³ Solution Center**

G4/G5, Pride Kumar Senate, Off. Senapati Bapat Road, Pune-411 016, INDIA

TEL:(91) 20-25660043/44/45

**Ahmedabad Office / M³ Solution Center**

A-104 & A-105, First Floor, Solitaire Corporate Park, Near Divya Bhaskar Press, S.G. Road, Ahmedabad - 380 015, INDIA

TEL: (91) 079 - 29704902/903

**Bengaluru Region Head office / M³ Solution Center**

116/117-2, Ground Floor, Sy. No. 93 & 94, 3rd Phase, Peenya Industrial Area, Bengaluru-560 058, INDIA

TEL: (91) 80-25630946/47/48/49

**Coimbatore Office**

Regus, Srivari Srimath, 3rd Floor, Door No:1045, Avinashi Road, Coimbatore - 641 018,INDIA

TEL: (91) 9345005663

**Chennai Office / M³ Solution Center**

No. 624, Anna Salai Teynampet, Chennai-600 018, INDIA

TEL: (91) 44-24328823/24/25

**Kolkata Office**

Unit No. 1208,Om Tower, 32,J.L.Nehru Road, Kolkata-700 071, INDIA

TEL: (91) 33-22267088/40060635/22266817

## Taiwan

**Mitutoyo Taiwan Co., Ltd. / M³ Solution Center Taipei**

4F., No.71, Zhouzi St., Neihu Dist.,Taipei City 114, TAIWAN

TEL:886(2)5573-5900 FAX:886(2)8752-3267

**Taichung Branch / M³ Solution Center Taichung**

1F., No. 299, Gaotie 1st Rd., Wuri Dist., Taichung City 414, TAIWAN

TEL:886(4)2338-6822 FAX:886(4)2338-6722

**Kaohsiung Branch / M³ Solution Center Kaohsiung**

1F., No.31-1, Haibian Rd., Lingya Dist., Kaohsiung City 802, TAIWAN

TEL:886(7)334-6168 FAX:886(7)334-6160

## South Korea

**Mitutoyo Korea Corporation**

**Head Office / M³ Solution Center**

33, Eungyejungang-ro 306beon-gil, Siheung-si, Gyeonggi-do, 15120 KOREA

TEL:82(31)361-4200 FAX:82(31)361-4201

**Busan Office / M³ Solution Center**

(3150-3, Daejeo 2-dong) 8,Yutongdanji 1-ro 49beon-gil, Gangseo-gu, Busan, 46721 KOREA

TEL:82(51)324-0103 FAX:82(51)324-0104

**Daegu Office / M³ Solution Center**

(Galsan-dong, Daegu Business Center), 301-Ho, 217, Seongseogongdan-ro, Dalseo-gu, Daegu 42704 KOREA

TEL:82(53)593-5602 FAX:82(53)593-5603

## China

**Mitutoyo Measuring Instruments (Shanghai) Co., Ltd.**

18/F, NEW BUND Shun Tak Center, No.18, Lane 666, West Haiyang Road, Pudong New District, Shanghai 200124, CHINA

TEL:86(21)5836-0718 FAX:86(21)5836-0717

**Suzhou Office / M³ Solution Center China (Suzhou)**

1/2 Floor, Building 4, No.175 Songbei Road, Suzhou Free Trade Zone, Suzhou City, Jiangsu 215000, CHINA

TEL:86(512)6522-1790 FAX:86(512)6251-3420

**Wuhan Office / M³ Solution Corner**

Room 1701, Wuhan Wanda Center, No. 96, Linjiang Road, Wuchang District, Wuhan Hubei 430060, CHINA

TEL:86(27)8544-8631 FAX:86(27)8544-6227

**Chengdu Office**

Room 1-102, 1st Floor, Unit 1, Building 1, No. 24, Wannian Road (Wanniancang Cool), Chenghua District, Chengdu City, Sichuan 610056, CHINA

TEL:86(28)8671-8936 FAX:86(28)8671-9086

**Hangzhou Office**

Room 329, 3F, Building D, West Square of Hangzhoudong Railway Station, No. 260 Xin-feng Road, Shangcheng District, Hangzhou City, Zhejiang 310002, CHINA

TEL: 86(571)8288-0319 FAX: 86(571)8288-0320

**Tianjin Office / M³ Solution Center China (Tianjin)**

Room D 12/F, TEDA Building, No.256 Jie-fang Nan Road Hexi District,Tianjin 300042, CHINA

TEL:86(22)5888-1700 FAX:86(22)5888-1701

**Changchun Office**

Room 815, 8F, Building A1, Upper East International No.3000 Dongsheng Street, Erdao District, Changchun, Jilin, 130031, CHINA

TEL:86(431)8192-6998 FAX:86(431)8192-6998

**Chongqing Office**

Room 1312, Building 3, Zhongyu Plaza, No.86, Hongjin Avenue,Longxi Street, Yubei District, Chongqing, 400000, CHINA

TEL:86(23)6595-9950 FAX:86(23)6595-9950

**Qingdao Office**

Room 638, 6F, No.192 Zhengyang Road, Chengyang District, Qingdao, Shandong, 266109, CHINA

TEL:86(532)8096-1936 FAX:86(532)8096-1937

**Xi'an Office**

Room 1503 Jianke Building,No.99 Yanta Road, Beilin District, Xi'an City, Shaanxi 710054, CHINA

TEL:86(29)8538-1380 FAX:86(29)8538-1381

**Dalian Office / M³ Solution Center China (Dalian)**

Room A-106 Shuijing SOHO, No.16 Harbin Road,Economic Development Zone,Dalian, 116600 CHINA

TEL:86(411)8718 1212 FAX:86(411)8754-7587

**Zhengzhou Office**

Room 5003, 50th Floor, South Tower of Greenland Centre, No.36 Yulin North Road, Zhengdong New District, Zhengzhou, Henan, 450000, CHINA

TEL:86(371)6097-6436 FAX:86(371)6097-6981

**Dongguan Office / M³ Solution Center China (Dongguan)**

Room 801, No 65, Chang'an Section Guanchang Road, Chang'an Town, Dongguan City, Guangdong 523841, CHINA

TEL:86(769)8541 7715 FAX:86(769)-8541 7745

**Fuzhou Office**

Unit 03, 7th floor of East Tower, Sansheng International Center, No.118 Wusi Road, Gulou Distrit, Fuzhou City, Fujian 350001, CHINA

TEL: 86 (591) 8761 8095
FAX: 86 (591) 8761 8096

**Changsha Office**

Room 2207, Building 1, Shiner International Plaza, No. 88, Kaiyuan Middle Road, Changsha City, Hunan 410100, CHINA

TEL: 86 (731) 8401 9276
FAX: 86 (731) 8401 9376

**Changzhou Office**

Room 1502, Joint Financial Tower, No.255, Tongjiang North Road, Tianning District, Changzhou City, Jiangsu 2130002, CHINA

TEL:86(519)8815 8319 FAX:86(519)8815 8319

**Wenzhou Office**

Room 512, Building 4, Xinjingdujiayuan, Sanyang Street, Ouhai District, Wenzhou City, Zhejiang 325014, CHINA

TEL:86(577)8641 5280

**Shunde Office**

Room 1603, Buliding 26, Vanke Golden Riverside Plaza Phase II, No.13 Mid DeSheng Road, ShunDe District, Foshan City, Guangdong 528300, CHINA

TEL/FAX: 86(757)2228 8621

**Hefei Office**

UnitB3111-1, 1F, Block B3, Hulianbaodi Huiyuan, Heping Road, Yaohai District, Hefei City, Anhui 230001, CHINA

TEL: 86(551)6560 1006

**Mitutoyo Measuring Technology (Suzhou) Co., Ltd.**

1/2 Floor, Building 4, No.175 Songbei Road, Suzhou Free Trade Zone, Suzhou City, Jiangsu 215000, CHINA

TEL:86(512)6252-2660 FAX:86(512)6252-2580

## USA

**Mitutoyo America Corporation**

965 Corporate Blvd., Aurora, IL 60502, U.S.A.

TEL:1-(630)820-9666 Toll Free No. 1-888-648-8869

FAX:1-(630)978-3501

**Headquarters (Aurora) / M³ Solution Center**

965 Corporate Blvd., Aurora, IL 60502, U.S.A.

**Seattle (Renton) Office / M³ Solution Center**

1000 SW 34th St. Suite G, Renton, WA 98057 U.S.A.

TEL:1-(888)-648-8869

**Houston Office / M³ Solution Center**

4560 Kendrick Plaza Drive Suite 120 Houston, TX 77032, U.S.A.

TEL:1-(888)-648-8869 FAX:1-(281)227-0937

**Cincinnati (Mason) Office / M³ Solution Center**

6220 Hi-Tek Ct., Mason, OH 45040, U.S.A.

TEL:1-(888)-648-8869 FAX:1-(513)754-0718

**Detroit (Novi) Office / M³ Solution Center**

46850 Magellan Drive, Suite 100 Novi, MI 48377, U.S.A.

TEL:1-(888)-648-8869 FAX: 1-(248)-926-0928

**Los Angeles (City of Industry) Office / M³ Solution Center**

16925 E. Gale Ave., City of Industry, CA 91745, U.S.A.

TEL:1-(888)-648-8869 FAX:1-(626)369-3352

**Charlotte (Huntersville) Office / M³ Solution Center**

11515 Vanstory Dr., Suite 140, Huntersville, NC 28078, U.S.A.

TEL:1-(888)-648-8869 FAX:1-(704)875-9273

**Boston (Marlborough) Office / M³ Solution Center**

753 Forest Street, Suite 110, Marlborough, MA 01752, U.S.A.

TEL:1-(888)648-8869 FAX:1-(508)485-0782

**West Chester (Ohio) / Metrology Service Center**

8876 Beckett road, West Chester, OH 45069, USA

TEL:1-(888)-648-8869

**Mitutoyo America Corporation Calibration Lab**

965 Corporate Blvd., Aurora, IL 60502, U.S.A.

TEL:1-(888)-648-8869 FAX:1-(630)978-6477

**Mituotyo America Corporation CT-Lab Chicago**

965 Corporate Blvd., Aurora, IL 60502, U.S.A.

TEL: 1-(888)-648-8869 FAX: 1-(630)-820-3418

**Mitutoyo Research & Development America, Inc.**

11533 NE 118th St., Kirkland,
WA 98034-7111, U.S.A.

TEL:1-(425)821-3906 FAX:1-(425)821-32280

**Mitutoyo Research & Development America, Inc. - California Office**

16925 Gale Ave. City of Industry,
CA 91745-1806 U.S.A.

TEL: 1-(425)821-3906 FAX: 1-(425)821-3228

## Canada

**Mitutoyo Canada Inc.**

2121 Meadowvale Blvd., Mississauga,
Ont. L5N 5N1., CANADA

TEL:1-(905)821-1261 FAX:1-(905)821-4968

**Montreal Office**

7075 Place Robert-Joncas Suite 129, Montreal,
Quebec H4M 2Z2, CANADA

TEL:1-(514)337-5994 FAX:1-(514)337-4498

## Brazil

**Mitutoyo Sul Americana Ltda.**

**Head office / M³ Solution Center**

Avenida Mimes nº 25 – Loteamento Multivias II, Jardim Ermida I, CEP 13212-216 Jundiaí - SP, BRASIL

TEL: 55 (11) 5643-0004/0041

**Filial Curitiba / M³ Solution Center**

Rua Sergipe, nº 101, Sala A, Bairro Boneca do Iguaçu, São José dos Pinhais – Paraná – BRASIL CEP 83040120

TEL: 55 (41) 3534-1728

**Filial Joinville / M³ Solution Center**

Rua Sorocaba, No.265, Bairro Floresta, Joinville, Santa Catarina, BRASIL, CEP 89212-210

TEL: 55 (47) 3025-8062

**Filial Porto Alegre / M³ Solution Center**

Rua Emilio Boeckel nº 325, Bairro: Flao, São Leopoldo - RS, BRASIL CEP 93020-600

TEL: 55 (51) 3037-9383

## Argentina

**Mitutoyo Sul Americana Ltda.**

**Argentina Branch / M³ Solution Center**

AV. MITRE 1249 Piso. PB– FLORIDA – BUENOS AIRES ARGENTINA

TEL:54 (11) 4730-1433 FAX:54 (11) 4730-1411

## Mexico

**Mitutoyo Mexicana, S.A. de C.V.**

Industria Elēctrica No.15, Parque Industrial, Naucalpan de Juārez, Estado de Mēxico C.P.53370, MÉXICO

TEL: 52 (01-55) 5312-5612
FAX: 52 (01-55) 5312-3380

**Monterrey Office / M³ Solution Center**

Blv. Interamericana No. 103, Parque Industrial FINSA, C.P. 66636 Apodaca, N.L., MÉXICO

TEL: 52(01-81) 8398-8227/8228/8242/8244

FAX: 52(01-81) 8398-8226

**Tijuana Office / M³ Solution Center**

Calle José María Velazco 10501-C, Col. Cd. Industrial Nueva Tijuana, C.P. 22500 Tijuana, B.C., MÉXICO

TEL: 52 (01-664) 647-5024

**Querétaro Office / M³ Solution Center**

Av. Cerro Blanco No.500-1, Colonia Centro Sur, Querétaro, Querétaro, C.P. 76090, MÉXICO

TEL: 52 (01-442) 340-8018, 340-8019 and 340-8020
FAX: 52 (01-442) 340-8017

**Mitutoyo Mexicana, S.A. de C.V. Querétaro Calibration Laboratory**

Av. Cerro Blanco 500 30 Centro Sur, Querétaro, Querétaro, C.P. 76090, MÉXICO

TEL: 52 (01-442) 340-8018, 340-8019 and 340-8020
FAX: 52 (01-442) 340-8017

**Aguascalientes Office / M³ Solution Center**

Av. Aguascalientes No. 622, Local 15 Centro Comercial El Cilindro Fracc. Pulgas Pandas Norte, C.P. 20138, Aguascalientes, Ags. MÉXICO

TEL: 52 (01-449) 174-4140 and 174-4143

**Irapuato Office / M³ Solution Center**

Boulevard a Villas de Irapuato No. 1460 L.1 Col. Ejido

Irapuato C.P. 36643

Irapuato, Gto., MÉXICO

TEL: 52 (01-462) 144-1200 and 144-1400

# Revision Record

| Date of publication | Revision status | Details of revision |
|---|---|---|
| October 1, 2020 | First edition | Publication |
| December 1, 2021 | Revised first edition | Changes in orthography and expressions<br>Additions and changes due to the application of the UKCA (UK Conformity Assessed) marking |
| January 1, 2024 | Revised second edition | Additional explanations in the Troubleshooting<br>Revision due to changes of the harmonized European standards, etc. |
| July 1, 2025 | Revised third edition | Change of China RoHS compliance |

# Mitutoyo Corporation

20-1, Sakado 1-Chome, Takatsu-ku, Kawasaki-shi, Kanagawa 213-8533, Japan
Tel: +81 (0)44 813-8230  Fax: +81 (0)44 813-8231
Home page: https://www.mitutoyo.co.jp/global.html

For the EU Directive, Authorized representative and importer in the EU:
Mitutoyo Europe GmbH
Borsigstrasse 8-10, 41469 Neuss, Germany

For the UK Regulation, Authorized representative and importer in the UK:
Mitutoyo (UK) Ltd.
Joule Road, West Point Business Park, Andover, Hampshire SP10 3UX, UNITED KINGDOM



Printed in Japan

*No. 99MBC139A*