Mitutoyo

Separate Type ABSOLUTE Rotary Encoder

ABS OR700

User's Manual

- Instructions for use -

Read this document thoroughly before operating the product. After reading, retain it close at hand for future reference.
This English language version of the document contains the original instructions.

No. 99MBE213A Rev. 1
Date of publication: June 1, 2026 (1)

■ Product names and model numbers covered in this document

Product name	Model number
Rotary Encoder	ABS OR700

■ Notice regarding this document

- Mitutoyo Corporation assumes no responsibilities for any damage to the product, caused by its use not conforming to the procedure described in this document.
- Upon loan or transfer of this product, be sure to attach this document to the product.
- In the event of loss or damage to this document, immediately contact the agent where you purchased the product or a Mitutoyo sales office ("SERVICE NETWORK" on page App-1).
- Read this document thoroughly before operating the product. In particular, be sure to fully understand "Safety Precautions" on page 6 and "Precautions for Use" on page 6.
- The contents of this document are based on information current as of June 2026.
- No part or whole of this document may be transmitted or reproduced by any means without prior written permission of Mitutoyo Corporation.
- Some screen displays in this document may be highlighted, simplified or partially omitted for convenience of explanation. In addition, some of them may differ from actual ones to the extent that no user will misunderstand the functions and operations.
- Acrobat Reader is recommended for viewing PDF user's manuals.
- The corporation, organization and product names that appear in this document are their trademarks or registered trademarks.

©2025-2026 Mitutoyo Corporation. All rights reserved.

Contents

Contents **1**

About This Document **3**

Conventions Used in This Document **4**

Safety Precautions **6**

Precautions for Use **6**

Electromagnetic Compatibility (EMC) **7**

Export Control Compliance **7**

Notes on Export to European Countries **7**

Disposal of Products outside the European Countries **7**

Disposal of Old Electrical & Electronic Equipment (Applicable in the European Countries with Separate Collection Systems) **7**

China RoHS Compliance Information **8**

Warranty **9**

Disclaimer **9**

1 Overview **11**

1.1 Features 11

1.2 System Configuration and Part Names 12

1.3 Flow of Main Tasks 13

2 Setup for Installation **15**

2.1 Checking the Equipment Model 15

2.2 Installation Conditions 16

2.3 Designing the Encoder Installation Surface 17

2.4 Preliminary Preparation 18

3 Installation onto the Machine Main Unit **19**

3.1 Checking the Package Contents 19

3.2 Installation Procedure 20

3.3 Verifying Installation Surface Dimensions 21

3.4 Temporarily Fixing the Stator and Rotor 22

3.5 Connecting the PC and Starting the Software 25

3.6 Verifying the Rotor Installation Status 25

3.7 Stator Position Adjustment and Fastening 26
3.8 Final Confirmation 27
3.9 Cable Handling 27
4 Specifications 31
4.1 Specifications 31
4.2 Feedback Cable 33
4.2.1 Mitsubishi Electric Corporation Connector Specifications 33
4.2.2 FANUC Corporation Connector Specifications 33
4.2.3 Panasonic Corporation Connector Specifications 34
4.2.4 Yaskawa Electric Corporation Connector Specifications 34
4.2.5 Mitutoyo Connector Specifications (D-SUB15) 35
4.2.6 Pigtail cable 35
4.3 Calculating Feedback Cable Length 36
4.4 Dimensional Drawings 37
5 Troubleshooting 39
5.1 Alarm Detection Function 39
5.2 Alarm Code Details 41
5.2.1 For Mitsubishi Electric-Compatible Models 41
5.2.2 For FANUC-Compatible Models 42
5.2.3 For Panasonic-Compatible Models 43
5.2.4 For Yaskawa Electric-Compatible Models 44
SERVICE NETWORK App-1

About This Document

■ Positioning of this document

This describes the positioning of this document and its relationship with other installments.

ABS OR700 User's Manual (Simplified Version)	This is a simplified instruction manual. It is included with the ABS OR700.
ABS OR700 User's Manual (This Document)	This manual provides detailed information on hardware specifications and installation procedures for the ABS OR700.
ABS OR700 Application Software User's Manual	This manual explains how to operate the application software. Please download it from our website (https://www.mitutoyo.co.jp).

■ Intended readers of this document

This manual is intended for users who are operating the ABS OR700 for the first time.

They are also assumed to be able to understand individual instructions by reading the described drawings.

Conventions Used in This Document

■ Safety reminder conventions warning against potential hazards

⚠CAUTION	Indicates a hazard with a low level of risk which, if not avoided, **could result in minor or moderate injury**.
NOTICE	Indicates a situation which, if not avoided, **may result in property damage**.

■ Conventions indicating prohibited and mandatory actions

	Indicates concrete information about prohibited actions.
	Indicates concrete information about mandatory actions.
	Indicates that grounding needs to be implemented.

■ Conventions indicating referential information or reference location

IMPORTANT	Indicates information that must be known when using the product.
Tips	Indicates further information and details relevant for the operating methods and procedures explained in that section.
	Indicates reference location if there is information that should be referred to in this document or an extraneous User's Manual. Example: For details about XX, see  "1.1 Appellations for Each Part" on page 5 in "1 Overview".

■ Other conventions

( ): Round brackets	Represent a paraphrase of an immediately preceding phrase or a supplementary explanation.
" ": Double quotation marks	Represent a highlighted phrase. They also indicate an index where information to be referenced is described.
[ ]: Square brackets	Represents items displayed on the screen (menus, dialogs, buttons, tabs, etc.) and keys on the controller or keyboard. They also indicate an item to be purposely entered or selected by the customer. Furthermore, they indicate key switches on JSBOX (joystick box).
1, 2, 3 1, 2, 3, ...	Indicates the order and the contents of tasks. (1: indicates main tasks, 1: indicates detailed tasks)
»	Indicates the action resulted from some operation(s).

■ Example of conventions use

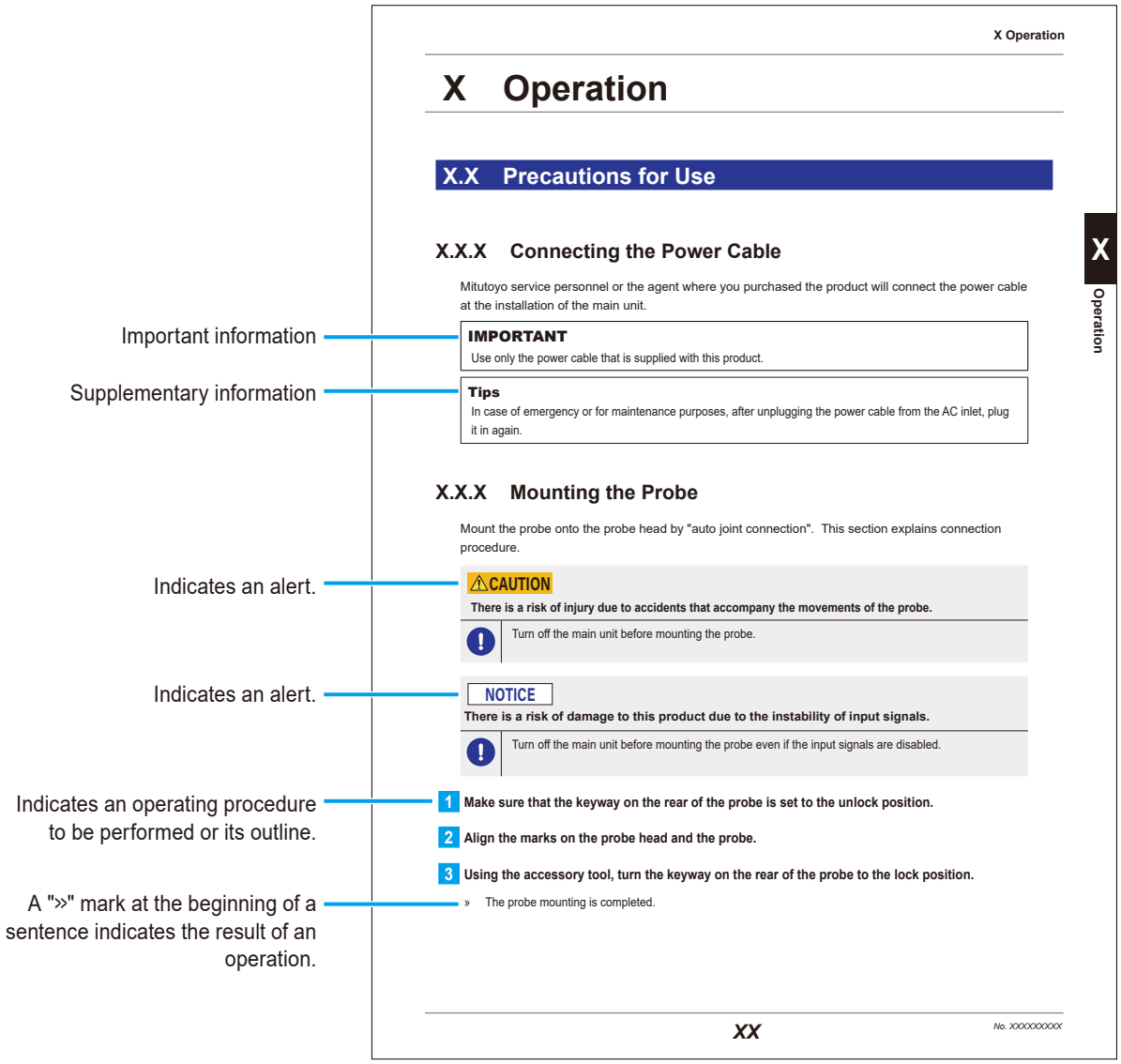

Safety Precautions

Read these "Safety Precautions" thoroughly before operating the product to use it properly.
These safety precautions include such information as to prevent injury to the operator and other persons, damage to property and product defects. Be sure to observe these precautions carefully.

■ Precautions for this product

- When installing this product on the machine main unit, make sure that the power to the controller is turned off.
- Tighten the screws on each connection cable connector securely to ensure proper shielding.
- Do not touch the connector terminals as this may cause poor contact.

Precautions for Use

■ Use and handling of the product

- The product is a measurement instrument.
  Do not use it for any other purpose than measurement.
- This product is for industrial usage.
  Do not use this product for purposes other than for industrial usage.
- The product is a precision instrument.
  Use it with extreme caution. Do not apply impact or excessive force to the product's parts during operation.

■ Environment for placement

• Vibration

To install the product onto a machine main unit, select a location where there is as little vibration as possible.

If the product is used for an extended period of time on a machine where there is a substantial amount of vibration, the built-in precision parts may be damaged, thereby adversely influencing the performance of the unit.

• Shock, dust, water protection

Be sure to attach a cover to the stator and rotor to prevent entry of water, oil, and dust, and to protect the product from being bumped by a workpiece.

• Ambient temperature and humidity

This product should be operated in an environment as shown below. "Operating environment" refers to the environment in which the rotary encoder is installed when the machine is in operation. Also, avoid using in places where the temperature or humidity changes rapidly.

Operating environment	**Temperature: 0 °C–50 °C** **Humidity: 20 %–80 % RH (non condensing)**

Electromagnetic Compatibility (EMC)

This product complies with the EMC Directive and the UK Electromagnetic Compatibility Regulations. However, if it is exposed to electromagnetic interference that exceeds the limits specified in these directives and regulations, the warranty will be invalidated and appropriate measures will be required.

This product is an industrial product, and is not intended to be used in residential environment. If this product is used in residential environment, this product may cause electromagnetic interference with other instruments. In such a case, it is required to take appropriate measures for preventing such electromagnetic interference.

Export Control Compliance

This product falls into the Catch-All-Controlled Goods and/or Catch-All-Controlled Technologies (including Programs) under Category 16 of Appended Table 1 of Export Trade Control Order or under Category 16 of Appended Table of Foreign Exchange Control Order, based on Foreign Exchange and Foreign Trade Act of Japan.

If you intend re-export of the product from a country other than Japan, re-sale of the product in a country other than Japan, or re-providing of the technology (including Programs), you shall observe the regulations of your country.

Also, if an option is added or modified to add a function to this product, this product may fall under the category of List-Control Goods, List-Control Technology (including Programs) under Category 1 - 15 of Appended Table 1 of Export Trade Control Order or under Category 1 - 15 of Appended Table of Foreign Exchange Control Order, based on Foreign Exchange and Foreign Trade Act of Japan. In that case, if you intend re-export of the product from a country other than Japan, re-sale of the product in a country other than Japan, or re-providing of the technology (including Programs), you shall observe the regulations of your country. Please contact Mitutoyo in advance.

Notes on Export to European Countries

When you intend exporting of this product to any of the European countries, it may be required to provide User's Manual(s) in English and Declaration of Conformity in English (in some cases, the official language of the country to be exported). For detailed information, please contact Mitutoyo in advance.

Disposal of Products outside the European Countries

Please follow the official instruction in each community and country.

Disposal of Old Electrical & Electronic Equipment (Applicable in the European Countries with Separate Collection Systems)



This symbol on the product or on its packaging is based on WEEE Directive (Directive on Waste Electrical and Electronic Equipment), and this symbol indicates that this product shall not be treated as household waste.

To reduce the environmental impact and minimize the volume of landfills, please cooperate in reuse and recycle.

For how to dispose of the product, please contact the agent where you purchased the product or a Mitutoyo sales office.

China RoHS Compliance Information

This product meets China RoHS requirements. See the table below.

产品中有害物质的名称及含量

部件名称	有害物质					
	铅 (Pb)	汞 (Hg)	镉 (Cd)	六价铬 (Cr(VI))	多溴联苯 (PBB)	多溴二苯醚 (PBDE)
本体	○	○	○	○	○	○
电气设备部分	×	○	○	○	○	○
配件	○	○	○	○	○	○

部件名称	有害物质			
	邻苯二甲酸二正丁酯 (DBP)	邻苯二甲酸二异丁酯 (DIBP)	邻苯二甲酸丁基苄酯 (BBP)	邻苯二甲酸二(2-乙基已)酯 (DEHP)
本体	○	○	○	○
电气设备部分	○	○	○	○
配件	○	○	○	○

本表格依据 SJ/T 11364 的规定编制。

○: 表示该有害物质在该部件所有均质材料中的含量均在 GB/T 26572 规定的限量要求以下。

×: 表示该有害物质至少在该部件的某一均质材料中的含量超出 GB/T 26572 规定的限量要求。



环保使用期限标识是根据《电器电子产品有害物质限制使用管理办法》以及《电器电子产品有害物质限制使用标识要求(SJ/T11364–2024)》制定的,适用于中国境内销售的电子电气产品的标识。

电器电子产品只要按照安全及使用说明内容在正常使用情况下,从生产日期算起,在此期限内产品中含有的有毒有害物质不致发生外泄或突变,不致对环境造成严重污染或对其人身、财产造成严重损害。

产品使用后,要废弃在环保使用年限内或者刚到年限的产品,请根据国家标准采取适当的方法进行处置。

另外,此期限不同于质量/功能的保证期限。

Warranty

This product has been manufactured under strict quality management, but should it develop problems within one year of the date of purchase in normal use, repair shall be performed free of charge. Please contact the agent where you purchased the product or a Mitutoyo sales office (📖 “SERVICE NETWORK” on page App-1).

If this product fails or is damaged for any of the following reasons, it will be subject to a repair charge, even if it is still under warranty.

- Failure or damage owing to fair wear and tear
- Failure or damage owing to inappropriate handling, maintenance or repair, or to unauthorized modification
- Failure or damage owing to transport, dropping, or relocation of the product after purchase
- Failure or damage owing to fire, salt, gas, abnormal voltage, lightning surge, or natural disaster
- Failure or damage owing to use in combination with hardware or software other than those designated or permitted by Mitutoyo
- Failure or damage owing to use in ultra-hazardous activities

This warranty is effective only where the product is properly installed and operated in conformance with the instructions in this document within the original country of the installation.

EXCEPT AS SPECIFIED IN THIS WARRANTY, ALL EXPRESS OR IMPLIED CONDITIONS, REPRESENTATIONS, AND WARRANTIES OF ANY NATURE WHATSOEVER INCLUDING, WITHOUT LIMITATION, ANY IMPLIED WARRANTY OF MERCHANTABILITY, FITNESS FOR A PARTICULAR PURPOSE, NONINFRINGEMENT OR WARRANTY ARISING FROM A COURSE OF DEALING, USAGE, OR TRADE PRACTICE, ARE HEREBY EXCLUDED TO THE MAXIMUM EXTENT ALLOWED BY APPLICABLE LAW.

You assume responsibility for all results due to the selection of this product to achieve your intended results.

Disclaimer

IN NO EVENT WILL MITUTOYO, ITS AFFILIATED AND RELATED COMPANIES AND SUPPLIERS BE LIABLE FOR ANY LOST REVENUE, PROFIT, OR DATA, OR FOR SPECIAL, DIRECT, INDIRECT, CONSEQUENTIAL, INCIDENTAL, OR PUNITIVE DAMAGES HOWEVER CAUSED AND REGARDLESS OF THE THEORY OF LIABILITY ARISING OUT OF THE USE OF OR INABILITY TO USE THIS PRODUCT EVEN IF MITUTOYO OR ITS AFFILIATED AND RELATED COMPANIES AND/OR SUPPLIERS HAVE BEEN ADVISED OF THE POSSIBILITY OF SUCH DAMAGES.

If, notwithstanding the foregoing, Mitutoyo is found to be liable to you for any damage or loss which arises out of or is in any way connected with use of this product by you, in no event shall Mitutoyo's and/or its affiliated and related companies' and suppliers' liability to you, whether in contract, tort (including negligence), or otherwise, exceed the price paid by you for the product only.

The foregoing limitations shall apply even if the above-stated warranty fails of its essential purpose.

BECAUSE SOME COUNTRIES, STATES OR JURISDICTIONS DO NOT ALLOW THE EXCLUSION OR THE LIMITATION OF LIABILITY FOR CONSEQUENTIAL OR INCIDENTAL DAMAGES, IN SUCH COUNTRIES, STATES OR JURISDICTIONS, MITUTOYO'S LIABILITY SHALL BE LIMITED TO THE EXTENT PERMITTED BY LAW.

1 Overview

This chapter describes the features of this product, the names and functions of each part, and the main work flow for using this product.

1.1 Features 11
1.2 System Configuration and Part Names 12
1.3 Flow of Main Tasks 13

1.1 Features

This product is a rotary encoder for feedback control of rotation angle and rotation speed. It continuously detects and outputs the absolute angle within a single rotation.

Use of an electromagnetic induction detection method ensures that water, oil, and other contaminants do not affect the detection function, and the separate type structure eliminates mechanical contact and deterioration due to wear.

A special adjustment mechanism, tools, and software are available that make it easy to install this product on the machine main unit.

Furthermore, this product supports high-speed serial interface communication of various manufacturers and has the following interface specifications.

- FANUC Corporation Specifications
- Mitsubishi Electric Corporation Specifications
- Yaskawa Electric Corporation Specifications
- Panasonic Corporation Specifications
- Mitutoyo Corporation ENSIS® Specifications
- BiSS Serial Communication

1.2 System Configuration and Part Names

The configuration of the ABS OR700 Rotary Encoder and the names of its parts are shown below.

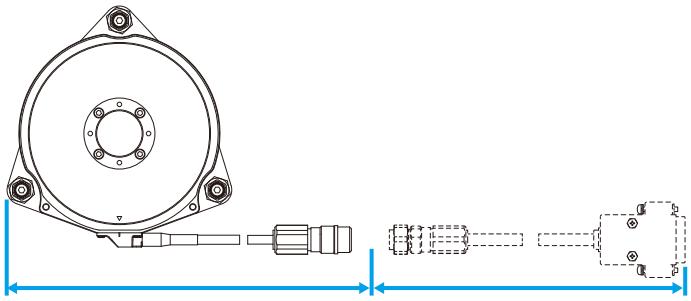

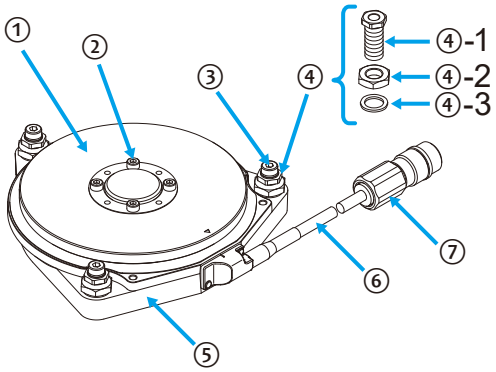

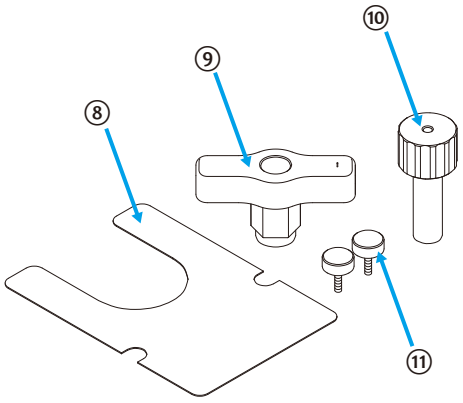

No.	Name
①	Rotor
②	Hexagon socket head bolt M3 x 12 (4 each, prepared by customer)
③	Hexagon socket head bolt M4 x 30 (3 each, included)
④	Adjustment mechanism (3 sets)
④-1	Adjustment bolt
④-2	Lock nut
④-3	Special size flat washer
⑤	Stator
⑥	Detector cable (1 m)
⑦	Output connector
⑧	Gap spacer (optional)
⑨	Clamp socket (optional)
⑩	Anti-rotation socket (optional)
⑪	Positioning pin (2 each, optional)

1.3 Flow of Main Tasks

The following chart shows the steps required for preliminary preparation and installation of this product on the machine main unit.

Application software is required for installing and adjusting this product on the machine main unit. Please download the application software from our website (https://www.mitutoyo.co.jp) and install it on your PC in advance.

For details, see "1 Overview" in the separate 📖 "ABS OR700 Application Software User's Manual".

Design the installation surface.	📖 "2.3 Designing the Encoder Installation Surface" on page 17
Prepare for installation.	📖 "2.4 Preliminary Preparation" on page 18
Check package contents.	📖 "3.1 Checking the Package Contents" on page 19
Verify installation surface dimensions.	📖 "3.3 Verifying Installation Surface Dimensions" on page 21
Install and adjust the stator and rotor.	📖 "3.2 Installation Procedure" on page 20 — 📖 "3.8 Final Confirmation" on page 27
Connect cables.	📖 "3.9 Cable Handling" on page 27

IMPORTANT

- Make sure that the serial numbers of the rotor and stator match the combination listed on the inspection sheet.
- Adjustment tools, a PC, and other equipment are required to install and adjust the stator and rotor. 📖 Refer to "2.4 Preliminary Preparation" on page 18 and prepare the necessary equipment.

MEMO

2 Setup for Installation

This chapter describes the preliminary preparations for installing this product on the machine main unit.

2.1 Checking the Equipment Model 15
2.2 Installation Conditions 16
2.3 Designing the Encoder Installation Surface 17
2.4 Preliminary Preparation 18

2.1 Checking the Equipment Model

This section describes the specifications of the rotary encoders indicated by the model numbers.
Check that the specifications match those of the equipment to be installed.

Model number	Specifications
ABS OR700-B-23	BiSS interface
ABS OR700-E-23	Mitutoyo ENSIS® high-speed serial interface
ABS OR700-F-23	FANUC Corporation Specifications high-speed serial interface
ABS OR700-M-23	Mitsubishi Electric Corporation Specifications CNC Series high-speed serial interface
ABS OR700-M-23A	Mitsubishi Electric Corporation Specifications MELSERVO high-speed serial interface
ABS OR700-P-23	Panasonic Corporation Specifications MINAS high-speed serial interface
ABS OR700-Y-23	Yaskawa Electric Corporation Specifications Σ Series high-speed serial interface

2.2 Installation Conditions

■ Dust and water protection

The ABS OR700 uses a sensor that is not affected by cutting fluid or dust, but it is not designed to prevent dust from entering between the stator and rotor, so it does not have an IP rating.

Small amounts of cutting fluid or dust on the rotary encoder do not affect its function, but due to its structure, the entry of iron dust may cause serious malfunctions. Therefore, use the device in environments where such exposure is minimized.

Please also note that the scale pattern or stator detection section may be damaged if foreign objects of approximately 0.4 mm in diameter enter the gap between the stator and the rotor during operation.

IMPORTANT

Be sure to attach a cover to the stator and rotor to prevent entry of contaminants such as water, oil, and dust.

■ Magnetism

The ABS OR700 uses a measurement sensor based on electromagnetic induction. Electromagnetic induction is a phenomenon in which applying an electric current to one of two opposing coils generates a magnetic flux, which induces an electric current in the other coil. Using this basic principle, the amount of displacement is calculated from the electric current generated in response to the displacement. Therefore, if equipment that generates a strong magnetic field (such as a direct drive motor) is located near the rotary encoder, please observe the following precautions during installation:

- If a rotary encoder is to be installed near a direct drive motor, keep it as far removed from magnetic influence as possible.
- If the rotary encoder must be installed near a direct drive motor, choose a location where the magnetic field is 3 mT or less.

2.3 Designing the Encoder Installation Surface

Refer to the following figure and "4.4 Dimensional Drawings" on page 37 to design the encoder installation surface.

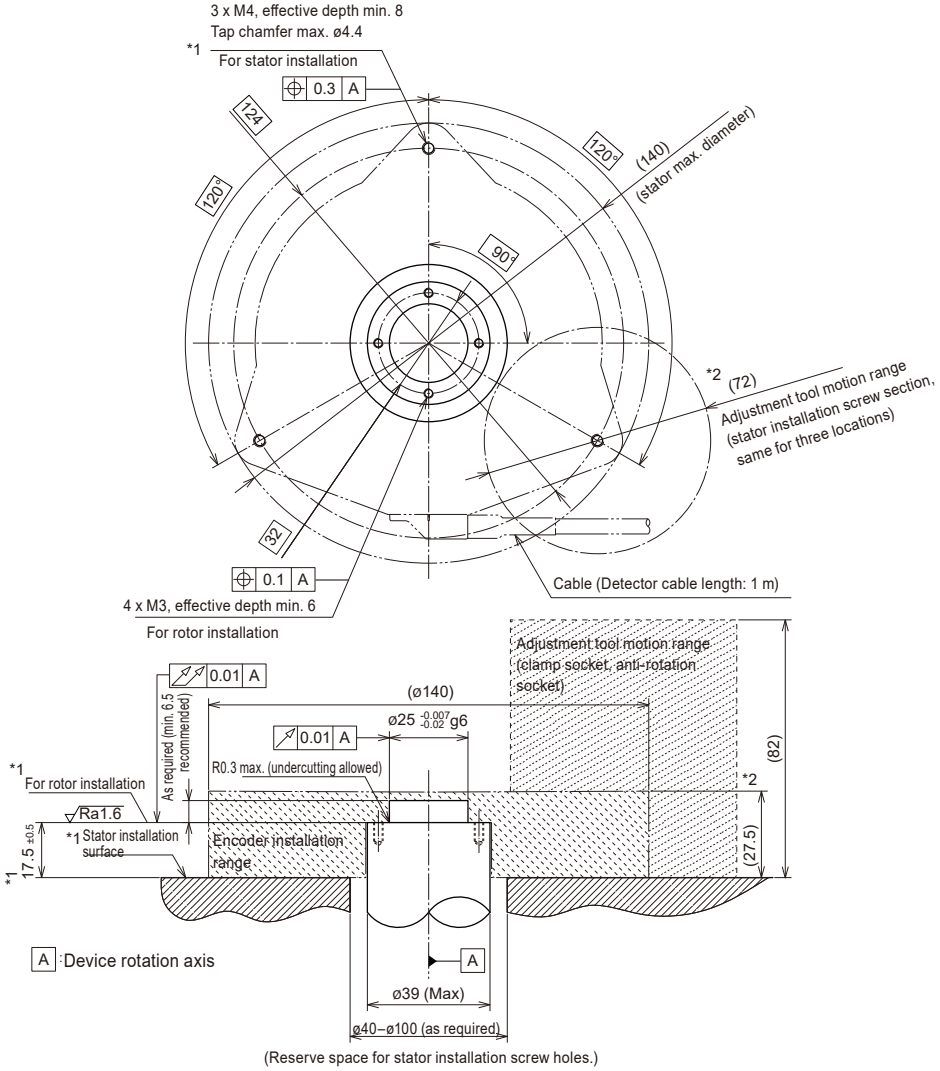

*1: The stator is shipped with the step between the stator and rotor installation surfaces adjusted to 17.5 mm.
Even if there is a step difference of 17.5±0.5 mm, the stator can be adjusted and installed using the stator's adjustment mechanism. For details, see "3 Installation onto the Machine Main Unit" on page 19.

*2: Secure sufficient space for adjustment tools (as shown in the diagram) and the fastening tool (torque wrench).

IMPORTANT

Be sure to attach a cover to the stator and rotor to prevent entry of contaminants such as water, oil, and dust.

2.4 Preliminary Preparation

The following tools and equipment are required to install and adjust the ABS OR700. Please prepare them in advance.

Component		Note
Hexagon socket head bolt M3 x 12 (4 each)	Prepared by customer.	For installing the rotor
Adjustment tool full set (Set Part No. 26AAA494) • Adjustment tool set (Part No. 26AAA493) Contents: Clamp socket, Anti-rotation socket • Positioning pin set (Part No. 26AAA531) Contents: Positioning pin (2 each) • Gap spacer (Part No. 06AHL697)	Optional	
Hex wrench (2.5 mm) Hex wrench (3.0 mm)	Prepared by customer.	For fastening the rotor For fastening the stator
Torque driver (for 2.5 mm and 3.0 mm socket head bolts) Torque wrench (width across flats: 19 mm)	Prepared by customer.	For torque control
ABS OR700 Application Software		Please download it from our website (https://www.mitutoyo.co.jp).
Signal conversion unit (Part No. 06ADT885) • USB-485 DS15P (SYSTEM SACOM Industry Corp.) • USB cable (Type-A)	Optional	
Connection cable (cable for connecting Signal conversion unit) • Circular waterproof connector — D-sub 15P (Part No. 06AHP048-☐☐) • Mitsubishi Electric cable (Part No. 06ADV024) • FANUC cable (Part No. 06ADV025) • Yaskawa Electric cable (Part No. ADW475)	Optional	☐ indicates cable length. Please contact the agent where you purchased the product or a Mitutoyo sales office (📖 "SERVICE NETWORK" on page App-1).

Prepare a PC that satisfies the following conditions.

Item	Specifications
CPU	1 GHz or faster with 2 or more cores on a compatible 64-bit processor
Memory	4 GB or more
Supported operating systems	Windows 11 only
Free disk space required for installation	100 MB
Monitor	1024 x 768 or higher
USB port	USB 2.0 port, 1 each

3 Installation onto the Machine Main Unit

This chapter describes the procedures, methods, and precautions required when installing this product onto the machine main unit.

3.1 Checking the Package Contents..... 19
3.2 Installation Procedure 20
3.3 Verifying Installation Surface Dimensions..... 21
3.4 Temporarily Fixing the Stator and Rotor 22
3.5 Connecting the PC and Starting the Software 25
3.6 Verifying the Rotor Installation Status 25
3.7 Stator Position Adjustment and Fastening..... 26
3.8 Final Confirmation..... 27
3.9 Cable Handling 27

3.1 Checking the Package Contents

Before starting installation, make sure that the product package contains all of the following items.
If the specifications of your rotary encode are not as specified or you have any questions, contact your dealer or the nearest Mitutoyo office / service center ("SERVICE NETWORK" on page App-1).

Name		Quantity	Note
Stator		1	Detector cable (1 m)
Adjustment mechanism			Provided attached to the stator.
	Adjustment bolt	3	
	Lock nut	3	
	Washer	3	
Rotor		1	
Hexagon socket head bolt M4 x 30		3	For stator installation (with washers)
Inspection sheet		1	
User's Manual (Simplified Version)		1	No. 99MBE214B
Product warranty card		1	

Serial numbers are indicated on the stator and rotor. Make sure that these numbers match those listed on the inspection sheet.

3.2 Installation Procedure

The following chart shows the steps required for installation of this product on the machine main unit.

Verify installation surface dimensions.	"3.1 Checking the Package Contents" on page 19
Temporarily fix the stator and rotor.	"3.4 Temporarily Fixing the Stator and Rotor" on page 22
Start the application software.	"3.5 Connecting the PC and Starting the Software" on page 25 Perform steps 3.6 through 3.8 as directed by the application software.
Verify the rotor installation status.	"3.6 Verifying the Rotor Installation Status" on page 25
Adjust the stator position.	"3.7 Stator Position Adjustment and Fastening" on page 26
Fasten the stator.	"3.7 Stator Position Adjustment and Fastening" on page 26
Perform final confirmation.	"3.8 Final Confirmation" on page 27
Installation complete.	

3.3 Verifying Installation Surface Dimensions

Refer to the drawing in "2.3 Designing the Encoder Installation Surface" on page 17 and the tolerance drawing below to check the installation section dimensions.

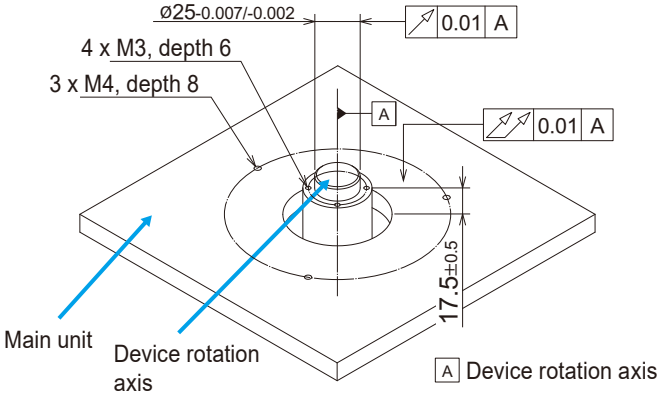

Checking shaft runout

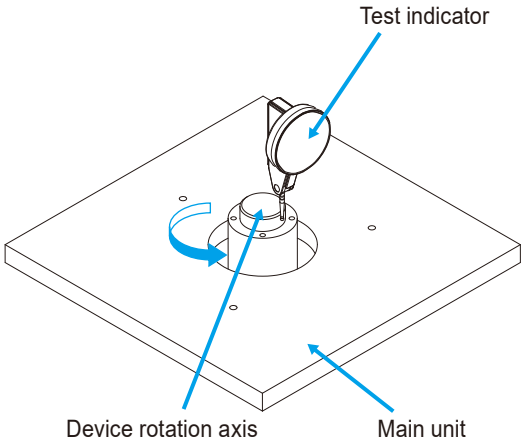

Checking rotor mounting surface runout

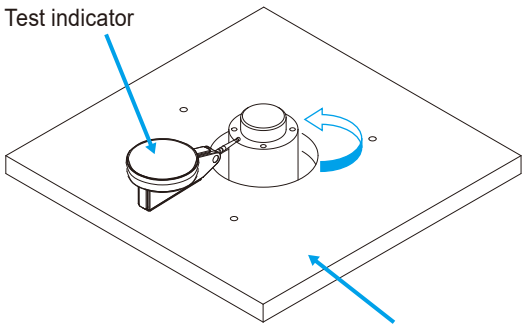

Checking step of rotor mounting surface

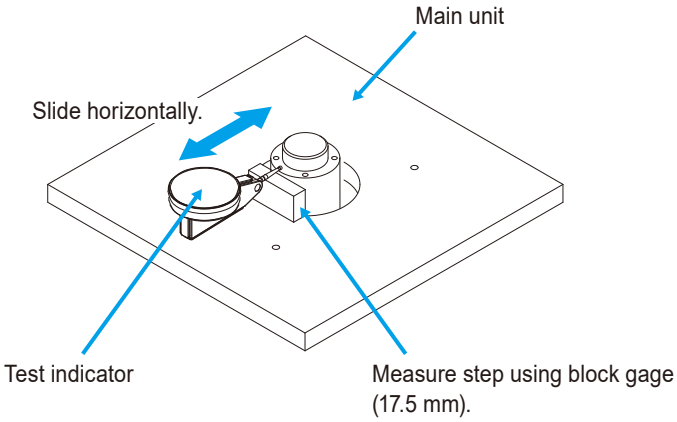

NOTICE

If the dimensions of the installation section are outside the tolerances specified in the diagram, installation and adjustment as described in this manual may not be possible.

Contact between the rotor and stator may result in damage, so be sure to check.

3.4 Temporarily Fixing the Stator and Rotor

Install the stator and rotor on the machine main unit and temporarily fix them in place.

1 Before installing the stator, adjust the height of the adjustment bolts (3 each).

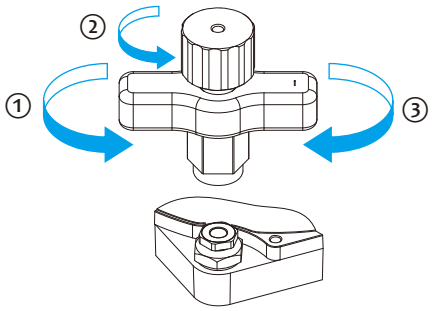

① Loosen the lock nuts.
② Turn each adjustment bolt a half turn in the counterclockwise direction.
③ Lightly tighten the lock nuts.

For information on how to use the adjustment tool, see "■ How to use the adjustment tool" on page 24.

Tips
This procedure is performed to prevent parts from interfering with each other when fixing the rotor and to ensure smooth adjustment.

2 Temporarily fix the stator to the main unit using M4 x 30 hexagon socket bolts (3 each, included with the product).

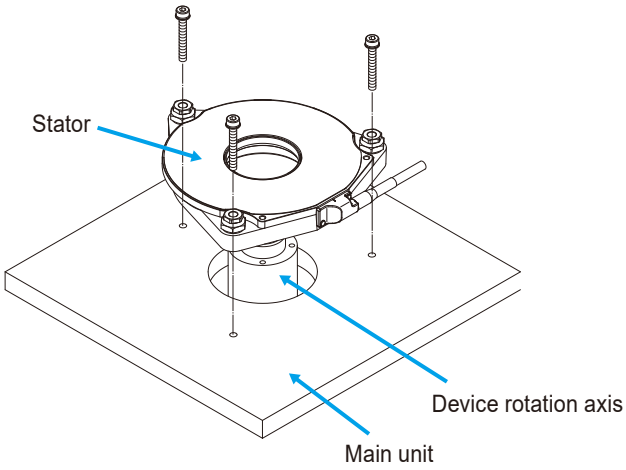

3 Fix the rotor with hexagon socket head bolts M3 x 12 (4 each).

When doing so, insert the gap spacer (optional) into the gap.

Item	Fastening screw	Tightening torque
Rotor fastening	Hexagon socket head bolt M3 x 12 (4 each, prepared by customer)	0.6 N·m

Tips
To fix the rotor securely, make sure that the gap spacer moves smoothly without resistance.

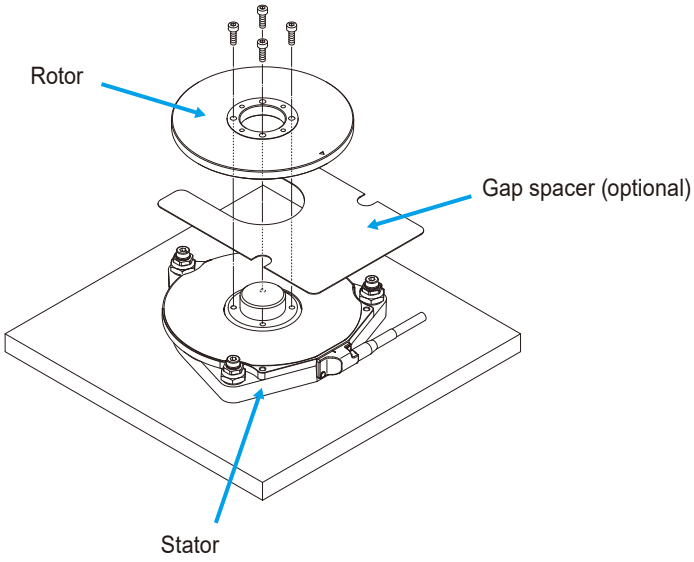

4 Temporarily adjust the gap between the stator and rotor.

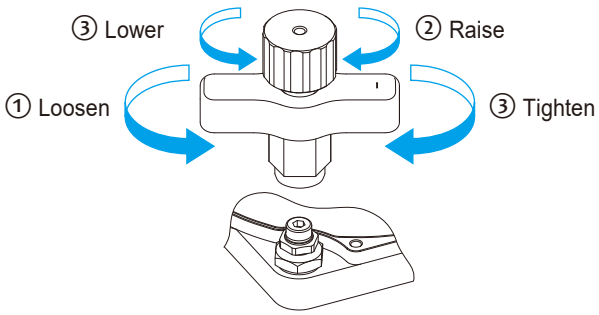

① Loosen the lock nuts.
② Adjust by turning the adjustment bolts.
③ Lightly tighten the lock nuts.
④ Remove the gap spacer.

For information on how to use the adjustment tool, see "■ How to use the adjustment tool" on page 24.

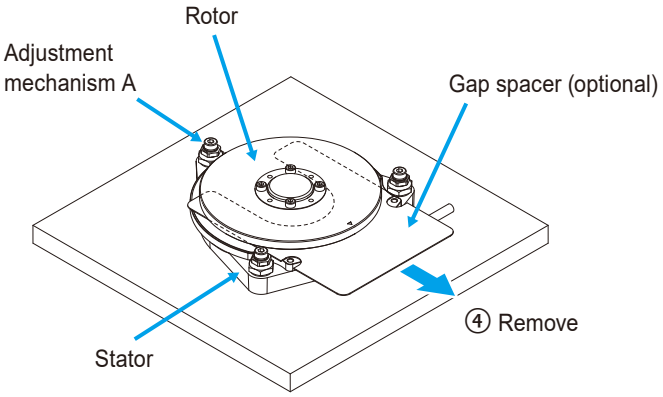

Move the gap spacer to find a position where you feel slight resistance, then temporarily tighten the lock nuts. After temporary tightening, remove the gap spacer.

Tips

Perform this procedure with the hexagon socket head bolts (M4 x 30) slightly loosened.

Starting with adjustment mechanism A, which is farthest from the gap spacer, gradually adjust the gap in sequence.

5 Temporarily adjust the stator's horizontal position.

Insert the positioning pins (2 each, optional) into the stator holes, press the positioning pin against the outer circumference of the rotor, and temporarily tighten the three M4 x 30 hexagon socket head bolts.

Once the temporary fixation is complete, be sure to remove the positioning pins.

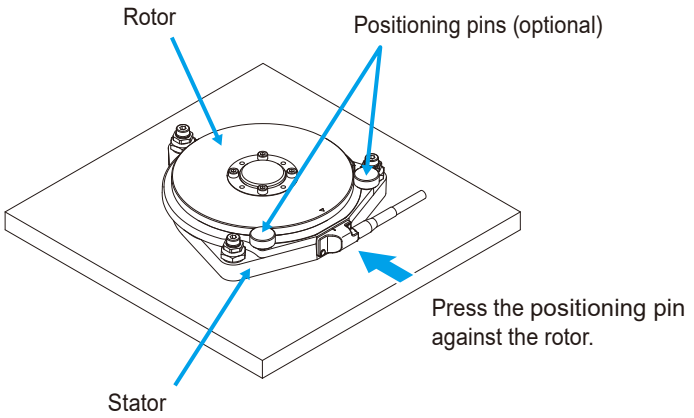

■ How to use the adjustment tool

By changing locations turned with the optional adjustment tool, you can adjust various parts of the adjustment mechanism.

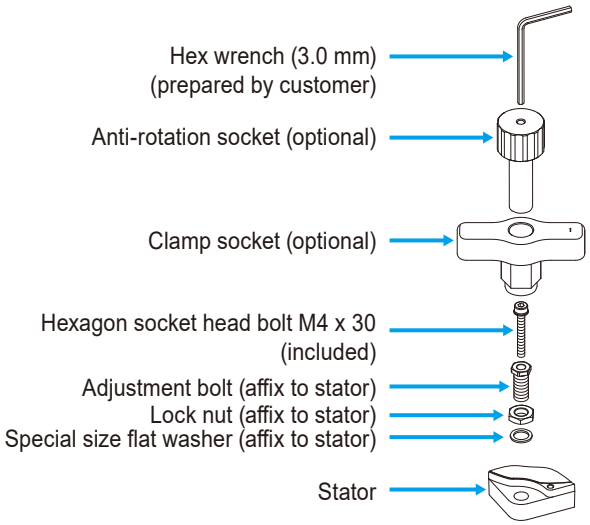

Turning each socket and hex wrench allows you to rotate the highlighted sections of the adjustment mechanism.

Adjusting height and tilt

Adjust after gradually loosening lock nut and hexagon socket head bolt.

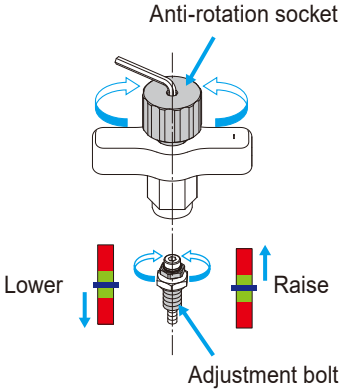

Fixing height

Do after adjusting height and tilt.

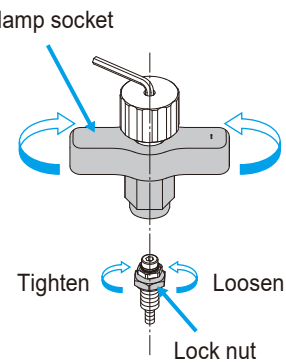

Fixing in position

Do after adjusting height and tilt and fixing height.

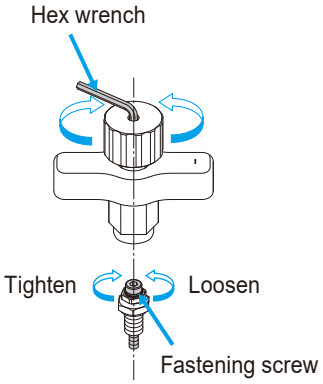

3.5 Connecting the PC and Starting the Software

For instructions on using the application software for each task, see the separate 📖 "ABS OR700 Application Software User's Manual".

1 Connect this product to the PC and start the application software.

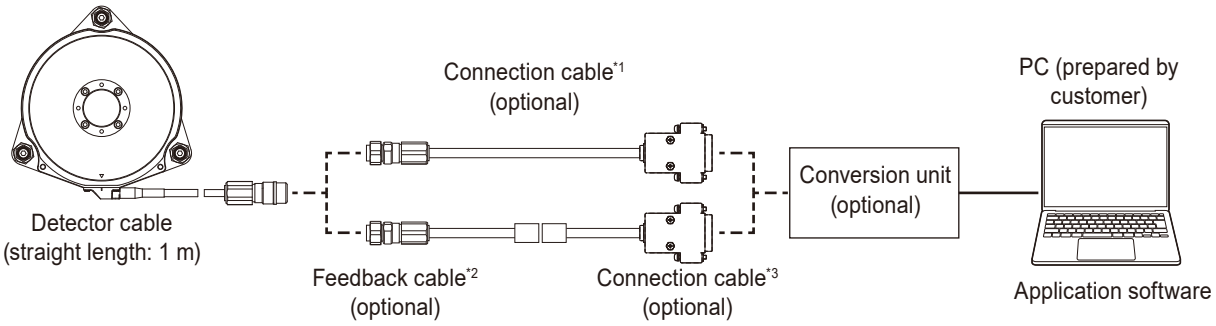

*1: Circular waterproof connector — D-SUB15

*2: Circular waterproof connector — Servo amplifier connection connector

*3: Servo amplifier connection connector — D-SUB15

2 On the software screen, select [Mounting Support] and perform the initial setup.

Select an installation position that is at eye level.

3 Using the application software, perform the installation and adjustment tasks from 📖 "3.6 Verifying the Rotor Installation Status" on page 25 through 📖 "3.8 Final Confirmation" on page 27.

3.6 Verifying the Rotor Installation Status

Use the application software to verify the rotor installation status. For details, see the separate 📖 "ABS OR700 Application Software User's Manual".

As you slowly rotate the rotor, the software collects data and evaluates the installation status (eccentricity and tilt).

If the installation is determined to be unsatisfactory, you may need to repeat the tasks described in

📖 "3.3 Verifying Installation Surface Dimensions" on page 21.

3.7 Stator Position Adjustment and Fastening

1 Use the application software and adjustment tool (optional) to adjust the stator installation position (tilt, height, eccentricity).

The application software automatically evaluates the installation position. For details, see the separate "ABS OR700 Application Software User's Manual".

⚠CAUTION

Stator positioning can be adjusted without rotating the rotor. To prevent damage or breakage, do not allow the rotor to rotate automatically during adjustment.

2 Once all items are evaluated as Pass, secure the stator with the specified torque.

When fully tightening the lock nut with a torque wrench, apply the torque wrench to the clamp socket (width across flats: 19 mm). When tightening, apply pressure to hold the anti-rotation socket in place.

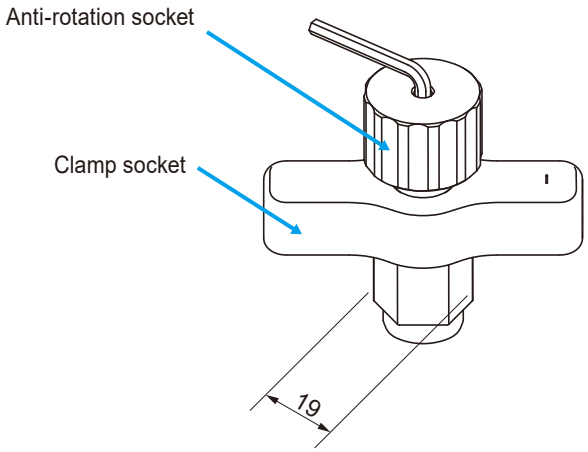

Item	Fastening screw	Tightening torque
Stator fastening	Hexagon socket head bolt M4 x 30 (3 each, included)	1.5 N·m
	Adjustment mechanism / lock nut (3 locations) * Turn the adjustment tool (width across flats: 19 mm) with a torque wrench.	3 N·m

NOTICE

The installation position of the stator may shift when torque is applied while tightening the lock nut or hexagon socket head bolts. If this occurs, readjust as necessary.

3.8 Final Confirmation

After completing the adjustment and fastening of the stator installation position, rotate the rotor again according to the navigation instructions in the application software.

Recheck and calibrate positioning of the rotor and stator. For details, see the separate 📖 "ABS OR700 Application Software User's Manual".

Tips

Calibration: By acquiring and compensating for signal strength, accuracy is improved within a range narrower than the signal period.

Installation adjustment is now complete.

Exit the application software and disconnect the PC.

After performing the tasks described in 📖 "3.9 Cable Handling" on page 27, connect to the servo amplifier.

3.9 Cable Handling

After installing the rotor and stator, connect and secure the cables.

Tips

The feedback cable must be prepared by customer. Refer to 📖 "4.2 Feedback Cable" on page 33 and obtain a cable appropriate for your equipment.

1 Arrange the cables carefully to avoid twisting or bending.

IMPORTANT

Do not bundle the Detector cable or feedback cable with other cables that are sources of electrical noise, or place them near relays that switch large currents on and off, as this may cause malfunctions due to noise.

2 Secure all cables with cable clamps or similar devices.

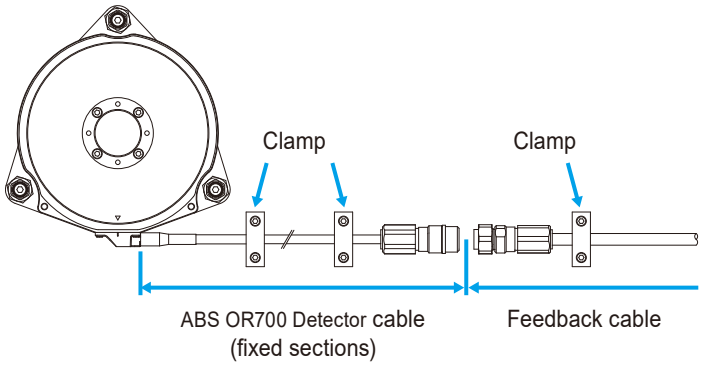

Tips

When installing this product, make sure that the stator and machine main unit are properly grounded. Without grounding, the unit may be affected by external noise. If grounding the stator installation section is difficult, be sure to ground the shield of the cable securely using an earth bar or similar method.

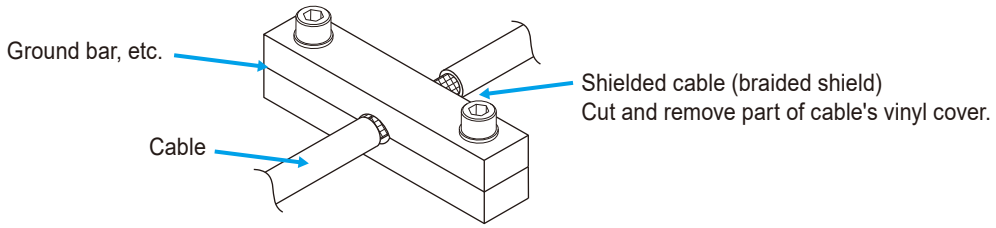

Example: Ground bar usage drawing

NOTICE

There is a risk of damage to or disconnection of cables, connectors, or the Detector.

- Take care to prevent **connectors** from being shaken due to vibration.

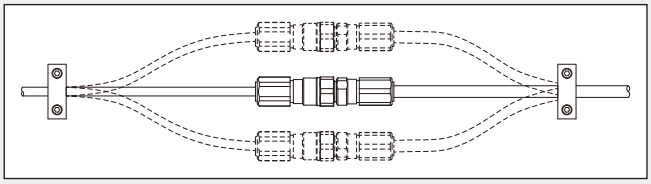

NOTICE

There is a risk of cable damage or disconnection.

- If repeated bending of the cable is expected, arrange the cables so that movement is limited to the feedback cable as much as possible, rather than the Detector cable. Please also ensure than no stress is applied near cable clamp.

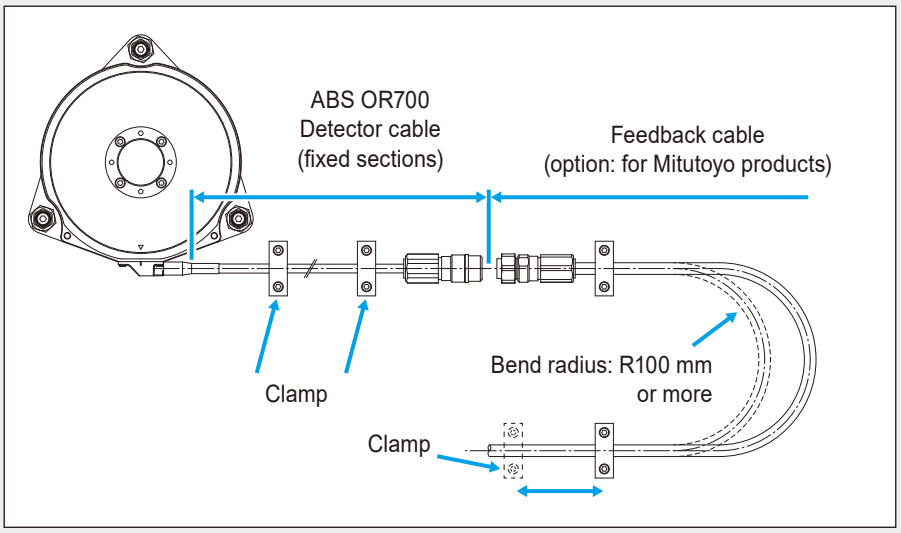

- If the Detector cable must be bent, maintain the bending radius as specified below:

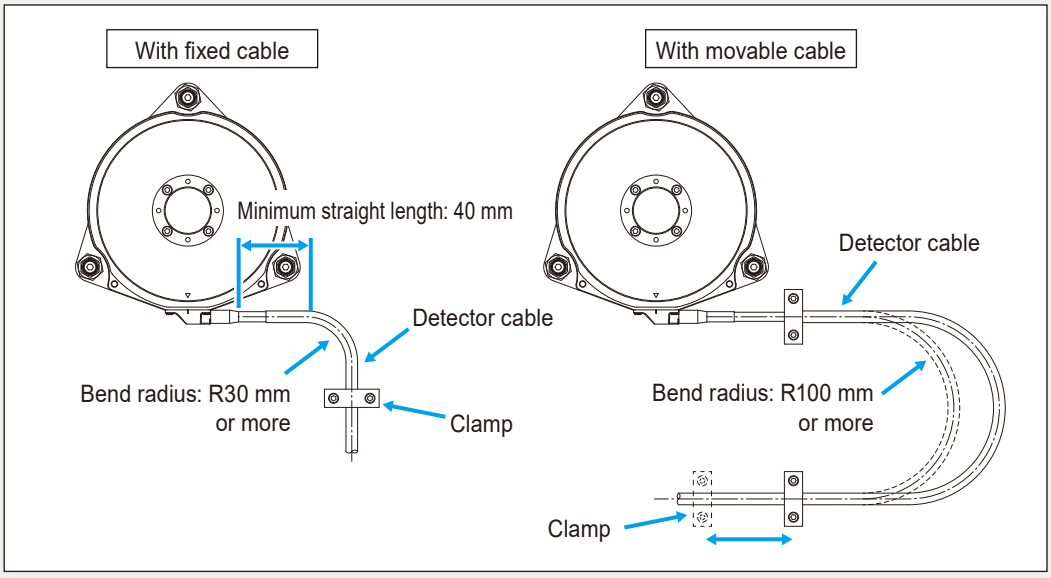

MEMO

4 Specifications

This chapter describes the specifications of this product.

4.1 Specifications

Item	Specifications	
Encoder type	Electromagnetic induction	
Angle detection / output method	Single-turn absolute	
Interfaces	Mitutoyo ENSIS® high-speed serial interface	
	Mitsubishi Electric Corporation Specifications MELSERVO high-speed serial interface	
	Mitsubishi Electric Corporation Specifications CNC Series high-speed serial interface	
	Panasonic Corporation Specifications MINAS high-speed serial interface	
	Yaskawa Electric Corporation Specifications Σ Series high-speed serial interface	
	FANUC Corporation Specifications high-speed serial interface	
	BiSS interface	
Resolution	23 bit (approx. 0.15 arcseconds)	
Indication precision (at 20 °C)	±5 arcseconds	
Size (D: Outer diameter, d: Inner diameter, T: Thickness)	Stator	D 140 mm (d 40 mm) x T 16 mm D 140 mm (d 40 mm) x T 21.5 mm (including adjustment mechanism)
	Rotor	D 100 mm (d 25 mm) × T 7 mm
Response speed	2,000 min^{-1}	
Detector cable length	1 m (directly connected from stator, with waterproof connector)	
Maximum cable length	19 m (when an optional 18 m feedback cable is connected) Maximum length: 29 m (when a 28 m cable is connected; this cable must be prepared by customer)	
Operating temperature range	0 °C–50 °C	
Storage temperature range	-20 °C–70 °C	
Operating/storage humidity range	20%–80% RH (non-condensing)	
Vibration resistance	196 m/s^2 (55 Hz–2,000 Hz)	
Shock resistance	980 m/s^2 (11 ms)	
Power supply voltage	5 V ± 10 % (ripple and spike noise components must be total 100 mV or less.)	
Maximum current consumption	270 mA	
Inrush current	600 mA or less	
Rise time	≤ 1 second	
Moment of inertia (rotor)	160 x 10^{-6} kgm^2	
Weight (rotor)	130 g	
Weight (stator)	320 g (including 1 m Detector cable and adjustment mechanism)	

Counting direction

View from the rotor side. The arrow indicates the direction of rotor rotation.

CCW (decrement) CW (increment)

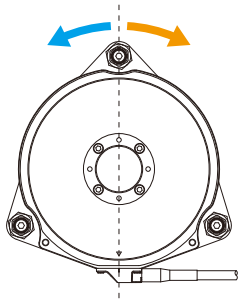

Detector cable connector (circular waterproof connector)

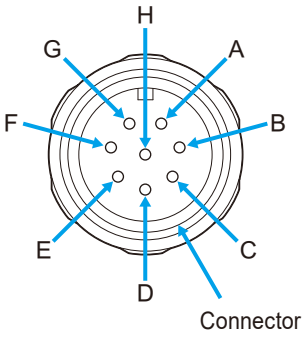

Pin No.	Signal name (non-BiSS)	Signal name (BiSS)
A, G	GND	GND
B, H	+5 V	+5 V
D	SD	SL+
C	*SD	SL-
F	RQ (REQ)	MA+
E	*RQ (REQ)	MA-
Connector shell	F.G.	F.G.

4.2 Feedback Cable

4.2.1 Mitsubishi Electric Corporation Connector Specifications

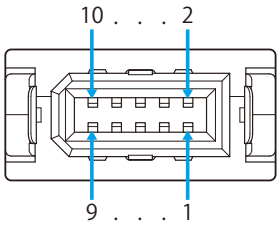

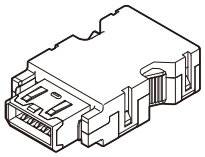

Pin number	Signal
1	5V
2	GND
3	RQDT
4	$\overline{\text{RQDT}}$
7	DT
8	$\overline{\text{DT}}$
5, 6, 9, 10	Not used
Connector shell	Frame ground

4.2.2 FANUC Corporation Connector Specifications

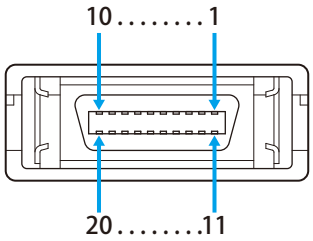

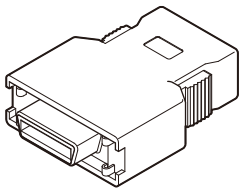

Pin number	Signal
1	SD
2	*SD
5	RQ (REQ)
6	*RQ (REQ)
12, 14	GND
18, 20	+5 V
16	Frame ground
3, 4, 7–11, 13, 15, 17, 19	Not used

4.2.3 Panasonic Corporation Connector Specifications

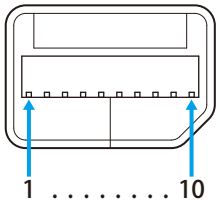

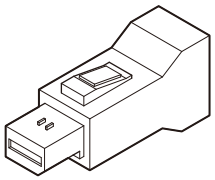

Pin number	Signal
1	E5V
2	E0V
3	PS
4	/PS
Connector shell	Frame ground
5–10	Not used

4.2.4 Yaskawa Electric Corporation Connector Specifications

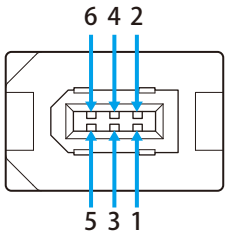

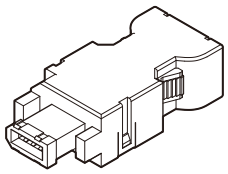

Pin number	Signal
1	VCC
2	GND
5	S
6	/S
Connector shell	Frame ground
3, 4	Not used

4.2.5 Mitutoyo Connector Specifications (D-SUB15)

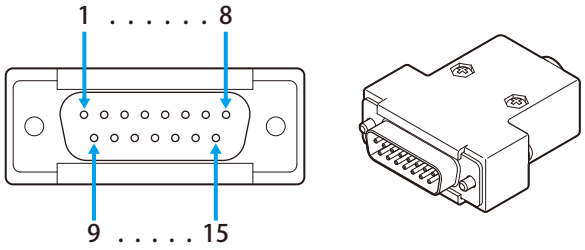

Pin number	Signal
5	DT
6	$\overline{DT}$
7	RQDT
8	$\overline{RQDT}$
1, 2, 13	GND
3, 4, 11	+5 V
15	Frame ground
9, 10, 12, 14	Not used

4.2.6 Pigtail cable

Wire color	Signal name (non-BiSS)	Signal name (BiSS specification)
Orange	DT	SL+
Yellow	$\overline{DT}$	SL-
Green	RQDT	MA+
Blue	$\overline{RQDT}$	MA-
Red, white, white	+5 V	+5 V
Brown, black, black	GND	GND
Shielded cable	Frame ground	Frame ground

4.3 Calculating Feedback Cable Length

When making a feedback cable, use the following method to calculate the maximum cable length.

■ Configuration

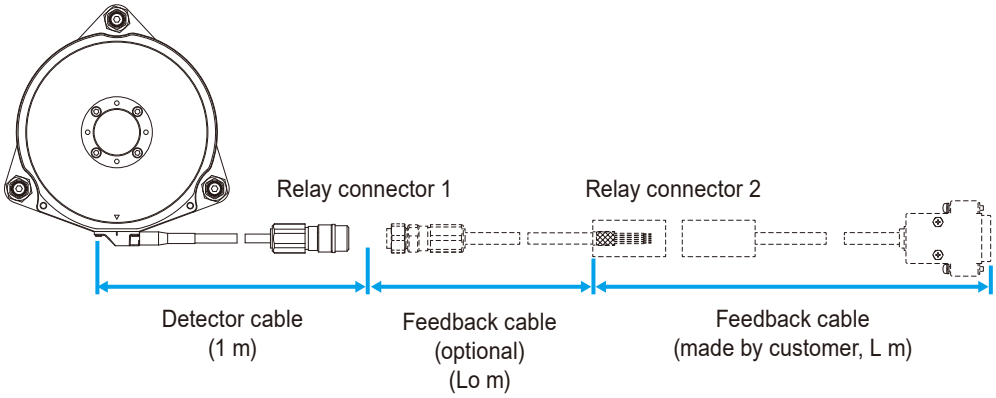

For specifications of the optional feedback cable, see "4.2.6 Pigtail cable" on page 35.

■ Condition: Detector cable length is 1 m

Name	Specification or symbol	Unit
Length of feedback cable (made by customer)	L	m
Power supply wire resistance (feedback cable made by customer)	a	Ω/m
Number of power supply wire pairs (feedback cable made by customer)	b	Pairs
Minimum supply voltage from the servo amplifier	4.95*1	V
Maximum current consumption	0.27	A
Length of feedback cable (optional)	Lo	m
Voltage drop of feedback cable (optional)	Vd = 0.0245 x Lo	V
Relay connector 1 voltage (minimum value)	4.54	V
Relay connector 2 voltage (minimum value)	4.54 + Vd	V

*1 This is the standard supply voltage for the servo amplifier.

■ Formula

Allowable voltage drop ≥ (current consumption x wire resistance x 2 x maximum cable length) ÷ number of power supply wire pairs (1)

Applying the conditions in the above table to formula (1) gives the following result.

(4.95 – 4.54 – Vd) [V] ≥ (0.27 [A] x a [Ω/m] x 2 x L [m]) ÷ b [pairs] (2)

Modify formula (2) as follows.

$$L\ [m] \leq \frac{b\ (4.95 - 4.54 - 0.0245 \times Lo)}{0.54\ a} \quad (3)$$

Prepare a feedback cable with maximum cable length (L [m]), wire resistance (a [Ω/m]), and number of power supply wire pairs (b [pairs]) that satisfy formula (3).

4.4 Dimensional Drawings

■ Stator dimensional drawing

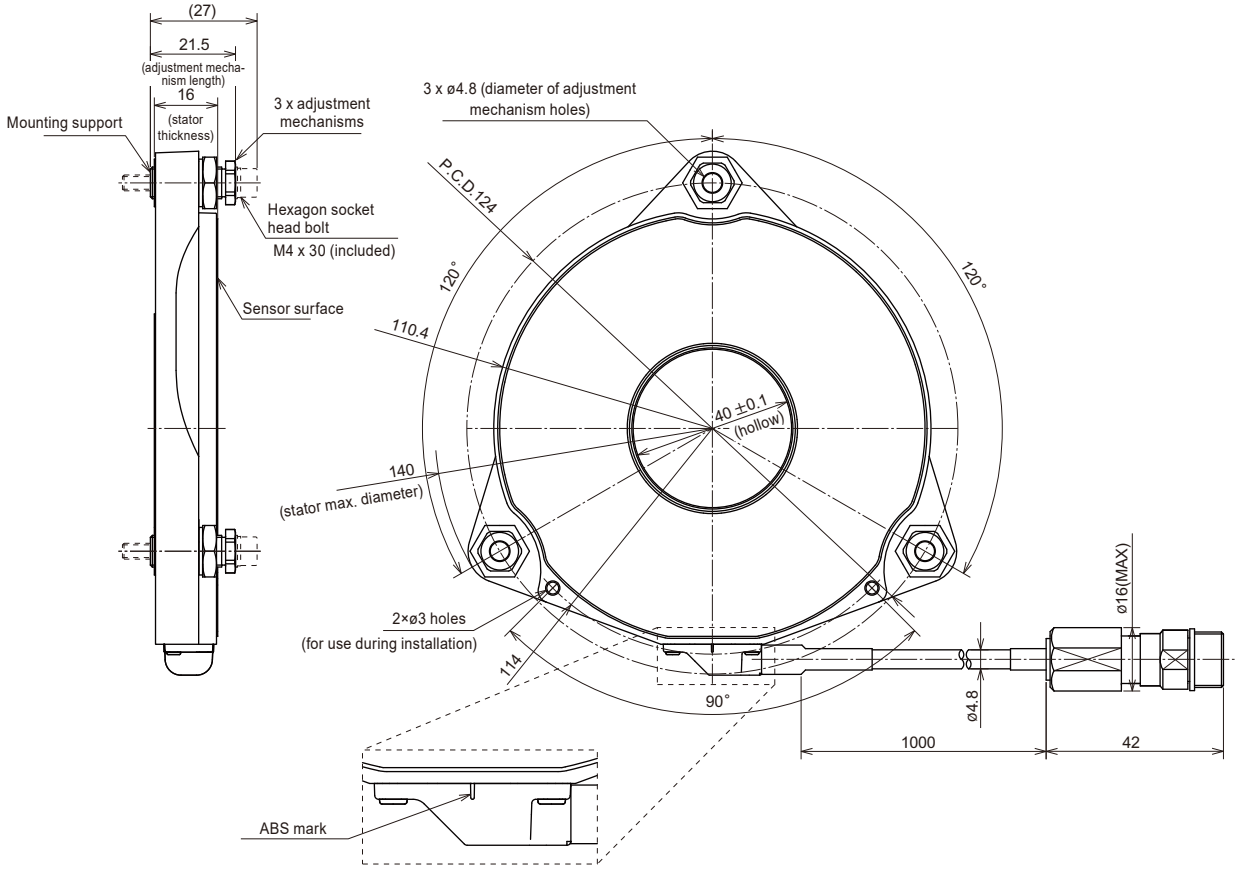

■ Rotor dimensional drawing

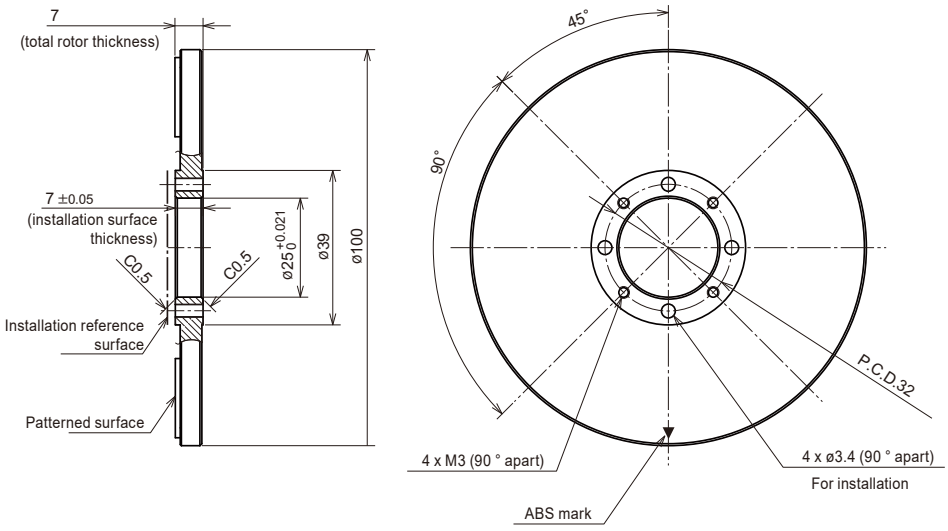

■ Dimensions after installation

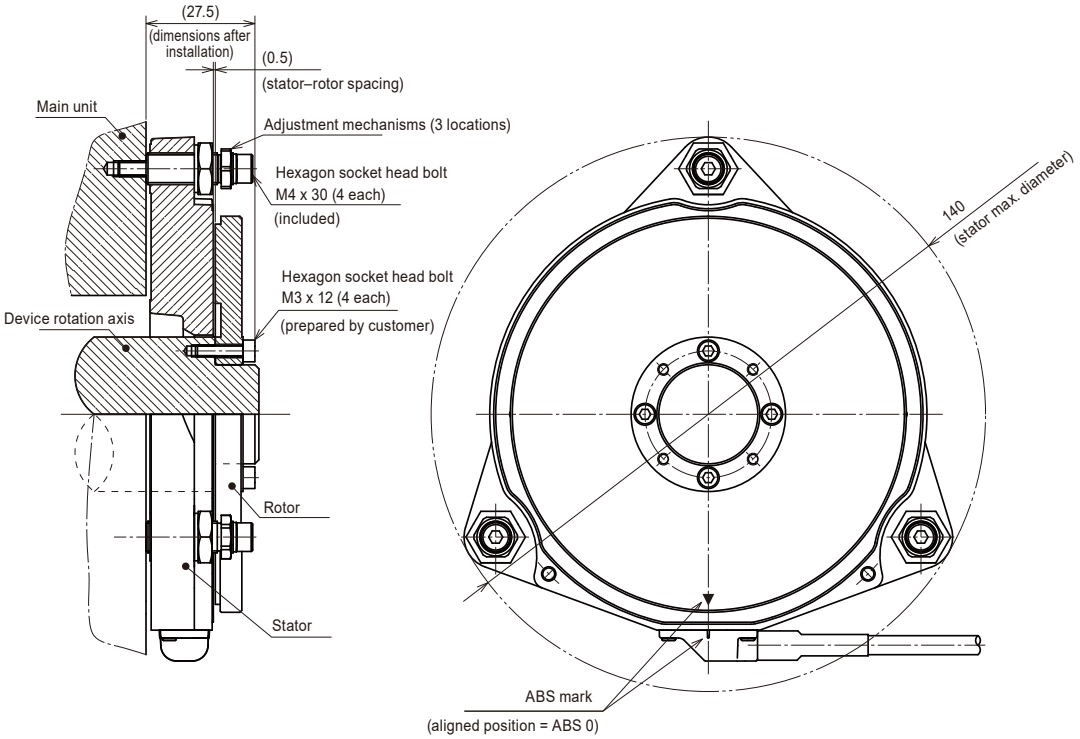

5 Troubleshooting

This chapter describes the Alarm Detection function built into the Detector and describes the alarm codes for each manufacturer's interface.

5.1 Alarm Detection Function..... 39
5.2 Alarm Code Details 41

5.1 Alarm Detection Function

The ABS OR700 Detector is equipped with an Alarm Detection function.

■ Alarm detection details

Alarms detected by the Alarm Detection function are broadly classified into two types: warnings and errors, as shown below.

- Warning: This indicates conditions such as decreased signal strength of the sensor or abnormal temperature inside the Detector. Once the cause is removed, normal operation resumes.
- Error: This indicates conditions such as abnormal sensor signal strength or absolute position detection errors. Once an error occurs, the error state is maintained until a reset or the power is cycled.

Type of alarm detection		Description
Warning	Thermal alarm	This warning is output when the internal temperature of the Detector reaches 75 °C or higher, and returns to normal when it falls below 70 °C.
	Signal strength alarm	This warning is output when the signal strength drops to 30 % or lower, and returns to normal when it rises above 30 %.
Error	Signal strength error	This error is output when the signal strength drops to 20 % or lower, or reaches 100 %.
	Signal balance error	This error is output when an abnormality occurs in the balance of internal signals.
	ABS detection error	This error is output when absolute position detection fails or an absolute synthesis error.
	Hardware error	This is output when a hardware error occurs.
	Initialization error	This error is output when system initialization fails to complete normally at power-on.
	Overspeed	This error is output when a rotational speed exceeding 2,000 min^{-1} is detected.

Tips

The history of alarms and errors can be checked using the application software.

NOTICE

The handling of warnings (alarms) and errors differs depending on the connected servo amplifier.

For details, see "5.2 Alarm Code Details" on page 41.

■ Signal strength

Signal strength is represented as three separate regions, as shown in the figure below. This diagram is displayed by the application software, allowing you to easily check the signal strength. The signal strength should always be within the normal region. If the signal strength falls within the warning or error regions, an alarm is output.

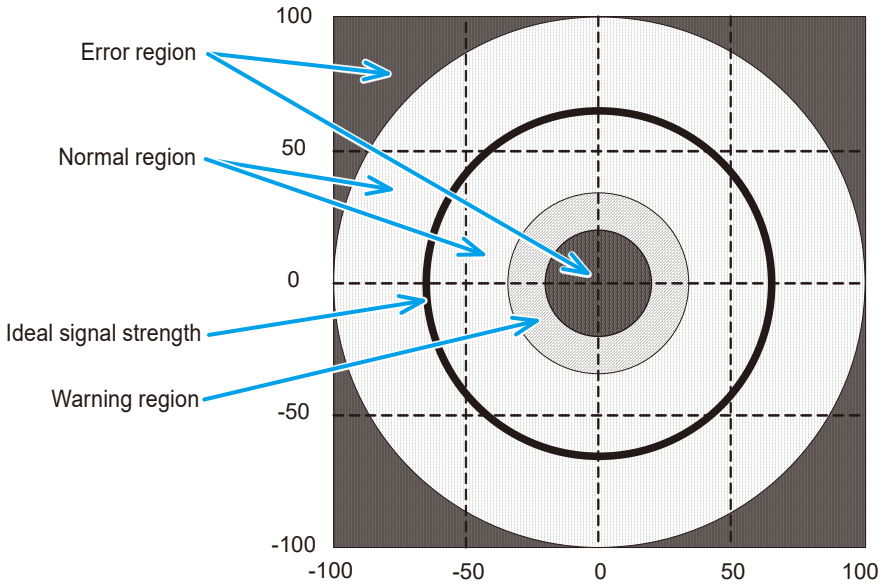

5.2 Alarm Code Details

For alarms related to ENSIS and BiSS, please contact the servo amplifier manufacturer.

5.2.1 For Mitsubishi Electric-Compatible Models

The table below shows the relationship between the ABS OR700-M-23 / ABS OR-700-M-23A alarms and the alarm codes displayed on servo amplifiers made by Mitsubishi Electric Corporation.

Servo amplifier alarm code	Description	Cause	Countermeasure
AL2A	**Rotary error occurred** • Signal strength error • ABS detection error • Hardware error • Initialization error • Overspeed	The stator detected an error.	• Check the positional relationship between the stator and rotor using the application software. • Perform installation and adjustment using the application software as needed.
AL28	**Rotary error occurred** • Thermal alarm • Signal strength alarm	The stator detected a warning. There is no error in the position data, but it is necessary to review the installation and operating conditions.	• The ambient temperature of the stator may have reached 60 °C or higher. If the temperature is 60 °C or higher, review the drive conditions (such as speed and acceleration). • Check the positional relationship between the stator and rotor using the application software. • Perform installation and adjustment using the application software as needed.
AL16	**Communication error occurred** (during servo amplifier initialization) • Three consecutive errors were received by the servo amplifier (including no response).	A communication error occurred between the ABS OR700 and the servo amplifier (communication was not possible from the time the servo amplifier was powered on).	• Check the connections of cables and connectors. • Check the routing of cables (for example, for noise effects from high-current cables). • When powering on, confirm that power is being supplied.
AL20	**Communication error occurred** (during servo amplifier control) • Three consecutive errors were received by the servo amplifier (including no response).	A communication error occurred between the ABS OR700 and the servo amplifier (occurred during control by the servo amplifier).	• Check the connections of cables and connectors. • Check the routing of cables (for example, for noise effects from high-current cables).

5.2.2 For FANUC-Compatible Models

The table below shows the relationship between the ABS OR700-F-23 alarms and the alarm codes displayed on servo amplifiers made by FANUC Corporation. Note that the alarm codes of NC devices differ depending on whether a rotary encoder is used with fully closed loop control or with a direct drive motor.

Servo amplifier alarm code	Description	Cause	Countermeasure
LED error • When using fully closed loop connection 380 • When using a direct drive motor 365	**Rotary error occurred** Hardware error	The stator detected an error.	Turn on the power again. If an error occurs again, the stator needs to be replaced.
Phase error • During fully closed connection 381 • When using a direct drive motor 361	**Rotary error occurred** • Initialization error • ABS detection errorr • Overspeed • Signal strength error • Signal strength alarm	The stator detected an error.	• Check the positional relationship between the stator and rotor using the application software. • Perform adjustment using the application software as needed.
Serial data error • When using fully closed loop connection 385 • When using a direct drive motor 368	**Communication error occurred** • No response	An error in communication between the ABS OR700 and the NC device prevented receipt of data from the rotary encoder (no response).	• Check the connections of cables and connectors. • Check the routing of cables (for example, for noise effects from high-current cables).
Data transfer error • When using fully closed loop connection 386 • When using a direct drive motor 369	**Communication error occurred** • Communication error	CRC and stop bit errors occurred in the serial data from the rotary encoder during communication between the ABS OR700 and the NC device (communication error).	Check the routing of cables (for example, for noise effects from high-current cables).
Hardware disconnection alarm • When using fully closed loop connection 447 • When using a direct drive motor 446	**Communication error occurred** • Cable disconnection	Due to cable disconnection, a communication error occurred between the ABS OR700 and the NC device.	Check the connections of cables and connectors.

5.2.3 For Panasonic-Compatible Models

The table below shows the relationship between the ABS OR700-P-23 alarms and the alarm codes displayed on servo amplifiers made by Panasonic Corporation.

Servo amplifier alarm code	Description	Cause	Countermeasure
Err51.0	**Rotary error occurred** • Overspeed	The stator detected an overspeed error.	Review the drive conditions (commanded speed).
Err51.1	**Rotary error occurred** • Initialization error	The stator detected an error during initialization.	• Check the positional relationship between the stator and rotor using the application software. • Perform installation and adjustment using the application software as needed. • Please check the power supply to the rotary encoder, including whether it contains ripple noise or other types of electrical noise.
Err51.2	**Rotary error occurred** • Hardware error	The stator detected an error.	Turn on the power again. If an error occurs again, the stator needs to be replaced.
Err51.3	**Rotary error occurred** • ABS detection error (mismatch)	The stator detected an error.	• Check the positional relationship between the stator and rotor using the application software. • Perform installation and adjustment using the application software as needed. • If there are no abnormalities with the installation, power supply, or other related factors, then the stator must be replaced.
Err51.4	**Rotary error occurred** • ABS detection error (detection stopped)	The stator detected an error.	• Check the positional relationship between the stator and rotor using the application software. • Perform installation and adjustment using the application software as needed. • If there are no abnormalities with the installation, power supply, or other related factors, then the stator must be replaced.

Servo amplifier alarm code	Description	Cause	Countermeasure
Err51.5	**Rotary error occurred** • Signal strength error	The stator detected a warning. There is no error in the position data, but it is necessary to review the installation and operating conditions.	• Check the positional relationship between the stator and rotor using the application software. • Perform installation and adjustment using the application software as needed. • If there are no abnormalities with the installation, power supply, or other related factors, then the stator must be replaced.
• Err50.0 • Err50.1	**Communication error occurred**	A communication error occurred between the ABS OR700 and the servo amplifier.	• Check the connections of cables and connectors. • Check the routing of cables (for example, for noise effects from high-current cables).

5.2.4 For Yaskawa Electric-Compatible Models

The table below shows the relationship between the ABS OR700-Y-23 alarms and the alarm codes displayed on servo amplifiers made by Yaskawa Electric Corporation.

Servo amplifier alarm code	Description	Cause	Countermeasure
• A.8A3 *1 • A.84U *2	**Rotary error occurred** • Signal strength error • ABS detection error • Initialization error	The stator detected an error.	• Check the positional relationship between the stator and rotor using the application software. • Perform installation and adjustment using the application software as needed.
• A.8A5 *1 • A.85U *2	**Rotary error occurred** • Overspeed	The stator detected an overspeed error.	Review the drive conditions (commanded speed).
• A.8A6 *1 • A.860 *2	**Rotary error occurred** • Thermal alarm • Signal strength alarm	The stator detected a warning. There is no error in the position data, but it is necessary to review the installation and operating conditions.	• The ambient temperature of the stator may have reached 60 °C or higher. If the temperature is 60 °C or higher, review the drive conditions (such as speed and acceleration). • Check the positional relationship between the stator and rotor using the application software. • Perform installation and adjustment using the application software as needed.

Servo amplifier alarm code	Description	Cause	Countermeasure
• A.8A1 *1 • A.891 *2	**Rotary error occurred** • Hardware error	The stator detected an error.	The stator needs to be replaced.
• A.CF1 *1 • C90 *2	**Communication error occurred** (during servo amplifier control) • Three consecutive errors were received by the servo amplifier (including no response).	A communication error occurred between the ABS OR700 and the servo amplifier (occurred during control by the servo amplifier).	• Check the connections of cables and connectors. • Check the routing of cables (for example, for noise effects from high-current cables).

*1 When using the rotary encoder with fully closed control

*2 When using the rotary encoder with a direct drive motor

SERVICE NETWORK

*As of February 2026

Europe

Mitutoyo Europe GmbH

Borsigstrasse 8-10, 41469 Neuss, GERMANY

TEL: 49 (0)2137 102-0
FAX: 49 (0)2137 102-351

Mitutoyo CTL Germany GmbH

Von-Gunzert-Strasse 17, 78727 Oberndorf, GERMANY

TEL: 49 (0)7423 8776-0

FAX: 49 (0)7423 8776-99

KOMEG Industrielle Messtechnik GmbH

Zum Wasserwerk 3, 66333 Völklingen, GERMANY

TEL: 49 (0)6898 91110
FAX: 49 (0)6898 9111100

Germany

Mitutoyo Deutschland GmbH

Borsigstrasse 8-10, 41469 Neuss, GERMANY

TEL: 49 (0)2137 102-0
FAX: 49 (0)2137 86 85

M³ Solution Center Hamburg

Tempowerkring 9·im HIT-Technologiepark 21079 Hamburg, GERMANY

TEL: 49 (0)40 791894-0
FAX: 49 (0)40 791894-50

M³ Solution Center Berlin

Ernst-Lau-Straße 6, 12489 Berlin, GERMANY

TEL:49(0)30 2611 267
FAX: 49 30 67988729

M³ Solution Center Eisenach

Neue Wiese 4, 99817 Eisenach,GERMANY

TEL: 49 (0)3691 88909-0
FAX: 49 (0)3691 88909-9

M³ Solution Center Ingolstadt

Marie-Curie-Strasse 1A, 85055 Ingolstadt, GERMANY

TEL: 49 (0)841 954920
FAX: 49 (0)841 9549250

M³ Solution Center Leonberg

Am Längenbühl 3, 71229 Leonberg, GERMANY

TEL: 49 (0)7152 6080-0
FAX: 49 (0)7152 608060

Mitutoyo Deutschland GmbH - Small Tool Sales Division

Am Längenbühl 4, 71229 Leonberg, GERMANY

TEL: 49 (0)7152 9237-0
FAX: 49 (0)7152 9237-29

Mitutoyo - Semiconductor Competence Center - Dresden

Riegel 5 Gostritzer Straße 67d 01217 Dresden, GERMANY

TEL: 49 (0)351 64756560

U.K.

Mitutoyo (UK) Ltd. HQ

Joule Road, West Point Business Park, Andover, Hampshire SP10 3UX, UNITED KINGDOM

TEL: 44 (0)1264 353123
FAX: 44 (0)1264 354883

Coventry M³ Solution Centre

Unit6, Banner Park, Wickmans Drive, Coventry, West Midlands CV4 9XA, UNITED KINGDOM

TEL: 44 (0)2476 426300

Halifax M³ Solution Centre

Lowfields Business Park, Navigation Close, Elland, West Yorkshire HX5 9HB, UNITED KINGDOM

TEL: 44 (0)1422 375566

East Kilbride M³ Solution Centre

The Bairds Building, Rankine Avenue, Scottish Enterprise Technology Park, East Kilbride G75 0QF, UNITED KINGDOM

TEL: 44 (0)1355 581170

France

Mitutoyo France

Paris Nord 2-123 rue de la Belle Etoile, BP 59267 ROISSY EN FRANCE 95957 ROISSY CDG CEDEX, FRANCE

TEL: 33 (0)149 38 35 00

M³ Solution Center LYON

94A avenue du Progrès 69680 Chassieu, FRANCE

TEL: 33 (0)149 38 35 70

M³ Solution Center STRASBOURG

Parc de la porte Sud, Rue du pont du péage, 67118 Geispolsheim, FRANCE

TEL: 33 (0)149 38 35 80

M³ Solution Center CLUSES

290 Avenue des Lacs, 74950 Scionzier, FRANCE

TEL: 33 (0)1 49 38 35 90

M³ Solution Center TOULOUSE

Aeroparc Saint Martin Cellule B08 ZAC de Saint Martin du Touch 12 rue de Caulet 31300 Toulouse, FRANCE

TEL: 33 (0)1 49 38 42 90

M³ Solution Center RENNES

2, rue Claude Chappe, PA le Vallon - ZAC Mivoie, 35230 Noyal-Châtillon-sur-Seiche, FRANCE

TEL: 33 (0)1 49 38 42 10

Italy

Mitutoyo Italiana S.r.l.

Corso Europa, 7 - 20045 Lainate (MI), ITALY

TEL: 39 02 935781
FAX: 39 02 93578255

M³ Solution Center BOLOGNA

Via Stalingrado 67/22D 40128 Bologna, ITALY

TEL: 39 02 93578215

M³ Solution Center CHIETI

Contrada Santa Calcagna - 66020 Rocca S. Giovanni (CH), ITALY

TEL: 39 02 93578280
FAX: 39 02 93578255

M³ Solution Center PADOVA

Via G. Galilei 21/F - 35035 Mestrino (PD), ITALY

TEL: 39 02 93578268
FAX: 39 02 93578255

Netherlands

Mitutoyo Nederland B.V.

Storkstraat 30, 3905 KX Veenendaal, THE NETHERLANDS

TEL: 31(0)318-534911

Mitutoyo Nederland B.V. / M³ Solution Center Eindhoven

De Run 1115, 5503 LB Veldhoven, THE NETHERLANDS

TEL: 31(0)318-534911

Mitutoyo Research Center Europe B.V.

De Rijn 18, 5684 PJ Best, THE NETHERLANDS

TEL:31(0)499-320200
FAX:31(0)499-320299

Belgium

Mitutoyo Belgium N.V. / M³ Solution Center Melsele

Schaarbeekstraat 20A bus 1, B-9120 Beveren-Kruibeke-Zwijndrecht, BELGIUM

TEL: 32 (0)3-2540444

Sweden

Mitutoyo Scandinavia AB

Släntvägen 6, 194 61 Upplands Väsby, SWEDEN

TEL: 46 (0)8 594 109 50

Mitutoyo Scandinavia AB / M³ Solution Center Alingsås

Ängsvaktaregatan 3A, 441 38 Alingsås, SWEDEN

TEL: 46 (0)8 594 109 50

Mitutoyo Scandinavia AB / M³ Solution Center Värnamo

Kalkstensvägen 7, 331 44 Värnamo, SWEDEN

TEL: 46 (0)8 594 109 50

Switzerland

Mitutoyo (Schweiz) AG

Steinackerstrasse 35, 8902 Urdorf, SWITZERLAND

TEL: 41 (0)447361150

Mitutoyo (Suisse) SA

Rue Galilée 4, 1400 Yverdon-les Bains, SWITZERLAND

TEL: 41 (0)244259422

Poland

Mitutoyo Polska Sp.z o.o.

Skrzypowa 1, 54-530 Wrocław, POLAND

TEL: 48 (0)71354 83 50
FAX: 48 (0)71354 83 55

Czech Republic

Mitutoyo Česko s.r.o.

Dubská 1635, 415 01 Teplice, CZECH REPUBLIC

TEL: 420 417-514-011
Email: info@mitutoyo.cz

Mitutoyo Česko s.r.o. M³ Solution Center Ivančice

Ke Karlovu 62/10, 664 91 Ivančice, CZECH REPUBLIC

TEL: 420 417-514-011
Email: info@mitutoyo.cz

Mitutoyo Česko s.r.o. M³ Solution Center Ostrava Mošnov

Mošnov 314, 742 51 Mošnov, CZECH REPUBLIC

TEL: 420 417-514-050
Email: info@mitutoyo.cz

Mitutoyo Česko s.r.o. Slovakia Branch

Šoltésovej 346/1, 017 01 Považská Bystrica, SLOVAKIA

TEL: 421 948-595-590
Email: info@mitutoyo.sk

Hungary

Mitutoyo Hungária Kft.

Galamb József utca 9, 2000 Szentendre, HUNGARY

TEL: 36 (30) 6410210

Romania

Mitutoyo Romania SRL

1A Drumul Garii Odai Street, showroom, Ground Floor, 075100 OTOPENI-ILFOV, ROMANIA

TEL: 40 (0)311012088
FAX: +40 (0)311012089

Showroom in Brasov

Strada Ionescu Crum Nr.1, Brasov Business Park Turnul 1, Mezanin, 500446 Brasov-Judetul Brasov, ROMANIA

TEL/FAX: 40 (0)371020017

Finland

Mitutoyo Scandinavia AB Finnish Branch

Autokeskuksentie 16B, 33960 Pirkkala, FINLAND

TEL: 358 (0)40 355 8498

Austria

Mitutoyo Austria GmbH

Salzburger Straße 260/2 und 260/3, 4600 Wels, AUSTRIA

TEL: 43 (0)7242 219 998

Mitutoyo Austria GmbH Goetzis Regional showroom

Lastenstrasse 48a, 6840 Götzis, AUSTRIA

Singapore

Mitutoyo Asia Pacific Pte. Ltd.

Head office / M³ Solution Center

24 Kallang Avenue, Mitutoyo Building, SINGAPORE 339415

TEL:(65)62942211
FAX:(65)62996666

Malaysia

Mitutoyo (Malaysia) Sdn. Bhd.

Kuala Lumpur Head Office / M³ Solution Center

Mah Sing Integrated Industrial Park, 4, Jalan Utarid U5/14, Section U5, 40150 Shah Alam, Selangor, MALAYSIA

TEL:(60)3-78459318
FAX:(60)3-78459346

Penang Branch office / M³ Solution Center

30, Persiaran Mahsuri 1/2, Sunway Tunas, 11900 Bayan Lepas, Penang, MALAYSIA

TEL:(60)4-6411998
FAX:(60)4-6412998

Johor Branch office / M³ Solution Center

70 (Ground Floor), Jalan Molek 1/28, Taman Molek, 81100 Johor Bahru, Johor, MALAYSIA

TEL:(60)7-3521626
FAX:(60)7-3521628

Thailand

Mitutoyo (Thailand) Co., Ltd.

Bangkok Head Office / M³ Solution Center

2327 Onnut Road Kwaeng Onnut Khet Suanluang Bangkok 10250, THAILAND

TEL:(66)2080 3500

Chonburi Branch / M³ Solution Center

7/1, Moo 3, Tambon Bowin, Amphur Sriracha, Chonburi 20230, THAILAND

TEL:(66)2080 3563
FAX:(66)3834 5788

ACC Branch / M³ Solution Center

122/8, 122/9, Moo 6, Tambon Donhuaroh, Amphur Muangchonburi, Chonburi 20000, THAILAND

TEL:(66)2080 3565

Indonesia

PT. Mitutoyo Indonesia

Head Office / M³ Solution Center

Jalan Sriwijaya No.26 Desa cibatu Kec. Cikarang Selatan Kab. Bekasi 17530, INDONESIA

TEL: (62)21-2962 8600
FAX: (62)21-2962 8604

Batam Branch Office

Business Center Adhya Building 3rd Floor Kompleks Permata Niaga Blok A No. 1, Jalan jendral Sudirman Kelurahan Sukajadi, Kecamatan Batam Kota, Kepulauan Riau 29444, INDONESIA

TEL: (62)-778-4888000

Vietnam

Mitutoyo Vietnam Co., Ltd

Hanoi Head Office / M³ Solution Center

1st & 2nd floor, MHDI Building, No. 60 Hoang Quoc Viet Road, Nghia Do Ward, Cau Giay District, Hanoi, VIETNAM

TEL:(84)24-3768-8963
FAX:(84)24-3768-8960

Ho Chi Minh City Branch Office / M³ Solution Center

Unit No. B-00.07, Ground Floor, C1 Building, No. 6, Street D9, An Loi Dong Ward, Thu Duc City, Ho Chi Minh City, VIETNAM

TEL:(84)28-3840-3489
FAX:(84)28-3840-3498

Hai Phong City Branch Office

Room 511, 5th Floor, Thanh Dat 3 Building, No. 4 Le Thanh Tong Street, May To Ward, Ngo Quyen District, Hai Phong City, VIETNAM

TEL:(84)22-5398-9909

Philippines

Mitutoyo Philippines, Inc.

Head Office / M³ Solution Center

Unit 1B & 2B LTI, Administration Building 1, Annex 1, North Main Avenue, Laguna Technopark, Binan Laguna 4024, PHILIPPINES

TEL/FAX:(63) 49 544 0272

Australia

Mitutoyo Oceania Pty Ltd

Unit1 3 Rocklea Drive, Port Melborne VIC 3207, AUSTRALIA

TEL:61-3-7053-1990

India

Mitutoyo South Asia Pvt. Ltd. Head Office

C-122, Okhla Industrial Area, Phase-I, New Delhi-110 020, INDIA

TEL: (91) 11-40578485/86

MSA Technical Center

Plot no. 65, Ground Floor, Udyog Vihar, Phase-4 Gurgaon, Haryana - 122016, INDIA

TEL : (91) 124–2340286/287

Mumbai Region Head office

303, Sentinel Hiranandani Business Park Powai, Mumbai-400 076, INDIA

TEL: (91) 22-25700684/685/837/839

Pune Office / M³ Solution Center

G4/G5, Pride Kumar Senate, Off. Senapati Bapat Road, Pune-411 016, INDIA

TEL:(91) 20-25660043/44/45

Ahmedabad Office / M³ Solution Center

A-104 & A-105, First Floor, Solitaire Corporate Park, Near Divya Bhaskar Press, S.G. Road, Ahmedabad - 380 015, INDIA

TEL: (91) 079 - 29704902/903

Bengaluru Region Head office / M³ Solution Center

116/117-2, Ground Floor, Sy. No. 93 & 94, 3rd Phase, Peenya Industrial Area, Bengaluru-560 058, INDIA

TEL: (91) 80-25630946/47/48/49

Coimbatore Office

Regus, Srivari Srimath, 3rd Floor, Door No:1045, Avinashi Road, Coimbatore - 641 018,INDIA

TEL: (91) 9345005663

Chennai Office / M³ Solution Center

No. 624, Anna Salai Teynampet, Chennai-600 018, INDIA

TEL: (91) 44-24328823/24/25

Kolkata Office

Unit No. 1208,Om Tower, 32,J.L.Nehru Road, Kolkata-700 071, INDIA

TEL: (91) 33-22267088/40060635/22266817

Taiwan

Mitutoyo Taiwan Co., Ltd. / M³ Solution Center Taipei

4F., No.71, Zhouzi St., Neihu Dist.,Taipei City 114, TAIWAN

TEL:886(2)5573-5900
FAX:886(2)8752-3267

Taichung Branch / M³ Solution Center Taichung

1F., No. 299, Gaotie 1st Rd., Wuri Dist., Taichung City 414, TAIWAN

TEL:886(4)2338-6822
FAX:886(4)2338-6722

Kaohsiung Branch / M³ Solution Center Kaohsiung

1F., No.31-1, Haibian Rd., Lingya Dist., Kaohsiung City 802, TAIWAN

TEL:886(7)334-6168
FAX:886(7)334-6160

South Korea

Mitutoyo Korea Corporation

Head Office / M³ Solution Center

33, Eungyejungang-ro 306beon-gil, Siheung-si, Gyeonggi-do, 15120 KOREA

TEL:82(31)361-4200
FAX:82(31)361-4201

Busan Office / M³ Solution Center

(3150-3, Daejeo 2-dong) 8,Yutongdanji 1-ro 49beon-gil, Gangseo-gu, Busan, 46721 KOREA

TEL:82(51)324-0103
FAX:82(51)324-0104

Daegu Office / M³ Solution Center

(Galsan-dong, Daegu Business Center), 301-Ho, 217, Seongseogongdan-ro, Dalseo-gu, Daegu 42704 KOREA

TEL:82(53)593-5602
FAX:82(53)593-5603

Daegeon Office

204-Ho, 419, Expo-ro, Yuseong-gu, Daejeon, 34051 KOREA

TEL:82(42)719-1270
FAX:82(42)719-5603

China

Mitutoyo Measuring Instruments (Shanghai) Co., Ltd.

18/F, NEW BUND Shun Tak Center, No.18, Lane 666, West Haiyang Road, Pudong New District, Shanghai 200124, CHINA

TEL:86(21)5836-0718
FAX:86(21)5836-0717

Suzhou Office / M³ Solution Center China (Suzhou)

1/2 Floor, Building 4, No.175 Songbei Road, Suzhou Free Trade Zone, Suzhou City, Jiangsu 215000, CHINA

TEL:86(512)6522-1790
FAX:86(512)6251-3420

Wuhan Office / M³ Solution Corner

Room 1701, Wuhan Wanda Center, No. 96, Linjiang Road, Wuchang District, Wuhan Hubei 430060, CHINA

TEL:86(27)8544-8631
FAX:86(27)8544-6227

Chengdu Office

Room 1-102, 1st Floor, Unit 1, Building 1, No. 24, Wannian Road (Wanniancang Cool), Chenghua District, Chengdu City, Sichuan 610056, CHINA

TEL:86(28)8671-8936
FAX:86(28)8671-9086

Hangzhou Office

Room 329, 3F, Building D, West Square of Hangzhoudong Railway Station, No. 260 Xinfeng Road, Shangcheng District, Hangzhou City, Zhejiang 310002, CHINA

TEL: 86(571)8288-0319
FAX: 86(571)8288-0320

Tianjin Office / M³ Solution Center China (Tianjin)

Room D 12/F, TEDA Building, No.256 Jie-fang Nan Road Hexi District,Tianjin 300042, CHINA

TEL:86(22)5888-1700
FAX:86(22)5888-1701

Changchun Office

Room 815, 8F, Building A1, Upper East International No.3000 Dongsheng Street, Erdao District, Changchun, Jilin, 130031, CHINA

TEL:86(431)8192-6998
FAX:86(431)8192-6998

Chongqing Office

Room 1312, Building 3, Zhongyu Plaza, No.86, Hongjin Avenue,Longxi Street, Yubei District, Chongqing, 400000, CHINA

TEL:86(23)6595-9950
FAX:86(23)6595-9950

Qingdao Office

Room 638, 6F, No.192 Zhengyang Road, Chengyang District, Qingdao, Shandong, 266109, CHINA

TEL:86(532)8096-1936
FAX:86(532)8096-1937

Xi'an Office

Room 1503 Jianke Building,No.99 Yanta Road, Beilin District, Xi'an City, Shaanxi 710054, CHINA

TEL:86(29)8538-1380
FAX:86(29)8538-1381

Dalian Office / M³ Solution Center China (Dalian)

Room A-106 Shuijing SOHO, No.16 Harbin Road,Economic Development Zone,Dalian, 116600 CHINA

TEL:86(411)8718 1212
FAX:86(411)8754-7587

Zhengzhou Office

Room 5003, 50th Floor, South Tower of Greenland Centre, No.36 Yulin North Road, Zhengdong New District, Zhengzhou, Henan, 450000, CHINA

TEL:86(371)6097-6436
FAX:86(371)6097-6981

Dongguan Office / M³ Solution Center China (Dongguan)

Room 201, Building 1, No. 405, Tai'an Road, Chang'an Section, Chang'an Town, Dongguan City, Guangdong 523850, CHINA

TEL:86(769)8541 7715
FAX:86(769)-8541 7745

Fuzhou Office

Unit 03, 7th floor of East Tower, Sansheng International Center, No.118 Wusi Road, Gulou Distrit, Fuzhou City, Fujian 350001, CHINA

TEL: 86 (591) 8761 8095
FAX: 86 (591) 8761 8096

Changsha Office

Room 2207, Building 1, Shiner International Plaza, No. 88, Kaiyuan Middle Road, Changsha City, Hunan 410100, CHINA

TEL: 86 (731) 8401 9276
FAX: 86 (731) 8401 9376

Changzhou Office

Room 1502, Joint Financial Tower, No.255, Tongjiang North Road, Tianning District, Changzhou City, Jiangsu 2130002, CHINA

TEL:86(519)8815 8319
FAX:86(519)8815 8319

Wenzhou Office

Room 512, Building 4, Xinjingdujiayuan, Sanyang Street, Ouhai District, Wenzhou City, Zhejiang 325014, CHINA

TEL:86(577)8641 5280

Hefei Office

UnitB3111-1, 1F, Block B3, Hulianbaodi Huiyuan, Heping Road, Yaohai District, Hefei City, Anhui 230001, CHINA

TEL: 86(551)6560 1006

Mitutoyo Measuring Technology (Suzhou) Co., Ltd.

1/2 Floor, Building 4, No.175 Songbei Road, Suzhou Free Trade Zone, Suzhou City, Jiangsu 215000, CHINA

TEL:86(512)6252-2660
FAX:86(512)6252-2580

USA

Mitutoyo America Corporation

965 Corporate Blvd., Aurora, IL 60502, U.S.A.

TEL:1-(630)820-9666 Toll Free No. 1-888-648-8869

FAX:1-(630)978-3501

Headquarters (Aurora) / M³ Solution Center

965 Corporate Blvd., Aurora, IL 60502, U.S.A.

Seattle (Renton) Office / M³ Solution Center

1000 SW 34th St. Suite G, Renton, WA 98057 U.S.A.

TEL:1-(888)-648-8869

Houston Office / M³ Solution Center

4560 Kendrick Plaza Drive Suite 120 Houston, TX 77032, U.S.A.

TEL:1-(888)-648-8869
FAX:1-(281)227-0937

Cincinnati (Mason) Office / M³ Solution Center

6220 Hi-Tek Ct., Mason, OH 45040, U.S.A.

TEL:1-(888)-648-8869
FAX:1-(513)754-0718

Detroit (Novi) Office / M³ Solution Center

46850 Magellan Drive, Suite 100 Novi, MI 48377, U.S.A.

TEL:1-(888)-648-8869
FAX: 1-(248)-926-0928

Los Angeles (City of Industry) Office / M³ Solution Center

16925 E. Gale Ave., City of Industry, CA 91745, U.S.A.

TEL:1-(888)-648-8869
FAX:1-(626)369-3352

Charlotte (Huntersville) Office / M³ Solution Center

11515 Vanstory Dr., Suite 140, Huntersville, NC 28078, U.S.A.

TEL:1-(888)-648-8869
FAX:1-(704)875-9273

Boston (Marlborough) Office / M³ Solution Center

753 Forest Street, Suite 110, Marlborough, MA 01752, U.S.A.

TEL:1-(888)648-8869
FAX:1-(508)485-0782

West Chester (Ohio) / Metrology Service Center

8876 Beckett road, West Chester, OH 45069, USA

TEL:1-(888)-648-8869

Mitutoyo America Corporation Calibration Lab

965 Corporate Blvd., Aurora, IL 60502, U.S.A.

TEL:1-(888)-648-8869
FAX:1-(630)978-6477

Mituotyo America Corporation CT-Lab Chicago

965 Corporate Blvd., Aurora, IL 60502, U.S.A.

TEL: 1-(888)-648-8869
FAX: 1-(630)-820-3418

Mitutoyo Research & Development America, Inc.

11533 NE 118th St., Kirkland, WA 98034-7111, U.S.A.

TEL:1-(425)821-3906
FAX:1-(425)821-3228

Mitutoyo Research & Development America, Inc. - California Office

16925 Gale Ave. City of Industry, CA 91745-1806 U.S.A.

TEL: 1-(425)821-3906
FAX: 1-(425)821-3228

Canada

Mitutoyo Canada Inc.

2121 Meadowvale Blvd., Mississauga, Ont. L5N 5N1., CANADA

TEL:1-(905)821-1261
FAX:1-(905)821-4968

Montreal Office

7075 Place Robert-Joncas Suite 129, Montreal, Quebec H4M 2Z2, CANADA

TEL:1-(514)337-5994
FAX:1-(514)337-4498

Brazil

Mitutoyo Sul Americana Ltda.

Head office / M³ Solution Center

Avenida Mimes nº 25 – Loteamento Multivias II, Jardim Ermida I, CEP 13212-216 Jundiaí - SP, BRASIL

TEL: 55 (11) 5643-0004/0041

Filial Curitiba / M³ Solution Center

Rua Sergipe, nº 101, Sala A, Bairro Boneca do Iguaçu, São José dos Pinhais – Paraná – BRASIL CEP 83040120

TEL: 55 (41) 3534-1728

Filial Joinville / M³ Solution Center

Rua Sorocaba, No.265, Bairro Floresta, Joinville, Santa Catarina, BRASIL, CEP 89212-210

TEL: 55 (47) 3025-8062

Filial Porto Alegre / M³ Solution Center

Rua Emilio Boeckel nº 325, Bairro: Flao, São Leopoldo - RS, BRASIL CEP 93020-600

TEL: 55 (51) 3037-9383

Minas Gerais Technical Support Center

Avenida Juiz Marco Túlio Isaac, nº 3540, LOJA 03, Betim Industrial, Betim - MG, BRASIL CEP 32671-150

TEL:55 (11) 4746-5831

Argentina

Mitutoyo Sul Americana Ltda.

Argentina Branch / M³ Solution Center

AV. MITRE 1249 Piso. PB– FLORIDA – BUENOS AIRES ARGENTINA

TEL:54 (11) 4730-1433
FAX:54 (11) 4730-1411

Mexico

Mitutoyo Mexicana, S.A. de C.V.

Industria Elēctrica No.15, Parque Industrial, Naucalpan de Juārez, Estado de Mēxico C.P.53370, MÉXICO

TEL: 52 (01-55) 5312-5612
FAX: 52 (01-55) 5312-3380

Monterrey Office / M³ Solution Center

Blv. Interamericana No. 103, Parque Industrial FINSA, C.P. 66636 Apodaca, N.L., MÉXICO

TEL: 52(01-81) 8398-8227/8228/8242/8244

FAX: 52(01-81) 8398-8226

Tijuana Office / M³ Solution Center

Calle José María Velazco 10501-C, Col. Cd. Industrial Nueva Tijuana, C.P. 22500 Tijuana, B.C., MÉXICO

TEL: 52 (01-664) 647-5024

Querétaro Office / M³ Solution Center

Av. Cerro Blanco No.500-1, Colonia Centro Sur, Querétaro, Querétaro, C.P. 76090, MÉXICO

TEL: 52 (01-442) 340-8018, 340-8019 and 340-8020
FAX: 52 (01-442) 340-8017

Mitutoyo Mexicana, S.A. de C.V. Querétaro Calibration Laboratory

Av. Cerro Blanco 500 30 Centro Sur, Querétaro, Querétaro, C.P. 76090, MÉXICO

TEL: 52 (01-442) 340-8018, 340-8019 and 340-8020
FAX: 52 (01-442) 340-8017

Aguascalientes Office / M³ Solution Center

Av. Aguascalientes No. 622, Local 15 Centro Comercial El Cilindro Fracc. Pulgas Pandas Norte, C.P. 20138, Aguascalientes, Ags. MÉXICO

TEL: 52 (01-449) 174-4140 and 174-4143

Irapuato Office / M³ Solution Center

Boulevard a Villas de Irapuato No. 1460 L.1 Col. Ejido

Irapuato C.P. 36643

Irapuato, Gto., MÉXICO

TEL: 52 (01-462) 144-1200 and 144-1400

Revision Record

Date of publication	Revision status	Details of revision
June 1, 2025	First edition	Publication
June 1, 2026	Revised first edition	Changes in orthography and expressions

Mitutoyo Corporation

20-1, Sakado 1-Chome, Takatsu-ku, Kawasaki-shi, Kanagawa 213-8533, Japan
Tel: +81 (0)44 813-8230 Fax: +81 (0)44 813-8231
Home page: https://www.mitutoyo.co.jp/global.html

For the EU Directive, Authorized representative and importer in the EU:
Mitutoyo Europe GmbH
Borsigstrasse 8-10, 41469 Neuss, Germany

For the UK Regulation, Authorized representative and importer in the UK:
Mitutoyo (UK) Ltd.
Joule Road, West Point Business Park, Andover, Hampshire SP10 3UX, UNITED KINGDOM

Printed in Japan

No. 99MBE213A