Mitutoyo

Assembly Type Square Wave Output Linear Scale

AT211

User's Manual

- Instructions for use -

Read this document thoroughly before operating the product. After reading, retain it close at hand for future reference.

No. 99MBE011A7
Date of publication: January 1, 2021 (1)

Correspondence of product names and model numbers

Product name	Model number
Assembly Type Square Wave Output Linear Scale	AT211

Notice regarding this document

- Mitutoyo Corporation assumes no responsibilities for any damage to the product, caused by its use not conforming to the procedure described in this document.
- Upon loan or transfer of this product, be sure to attach this document to the product.
- In the event of loss or damage to this document, immediately contact a Mitutoyo sales office or your dealer.
- Before operation of the product, thoroughly read this document to comprehend its contents.
- Particularly, for full understanding of information, carefully read "Safety Precautions" and "Precautions for Use" at the outset of this document before using the product.
- The contents in this document are based on the information current as of January, 2021.
- No part or whole of this document may be transmitted or reproduced by any means without prior written permission of Mitutoyo Corporation.
- Some screen displays in this document may be highlighted, simplified or partially omitted for convenience of explanation. In addition, some of them may differ from actual ones to the extent that no user will misunderstand the functions and operations.
- The corporation, organization and product names that appear in this document are their trademarks or registered trademarks.

CONVENTIONS USED IN MANUALS

Conventions used in Mitutoyo's User's Manual are roughly divided into three types (safety reminders, prohibited and mandatory actions, and referential information and locations). Moreover, these conventions include general warnings and specific warnings. Specific warning symbols are provided with concrete pictograms inside of them.

■ Safety reminder conventions and wording warning against potential hazards

DANGER	Indicates an immediately hazardous situation which, if not avoided, will result in serious injury or death.
WARNING	Indicates a potentially hazardous situation which, if not avoided, could result in serious injury or death.
CAUTION	Indicates a potentially hazardous situation which, if not avoided, may result in minor injury.
NOTICE	Indicates a potentially hazardous situation which, if not avoided, may result in property damage.
	Alerts the user to a specific hazardous situation that means "Caution, risk of electric shock".

■ Conventions and wording indicating prohibited and mandatory actions

	Indicates concrete information about prohibited actions.
	Indicates concrete information about mandatory actions.
	Indicates that grounding needs to be implemented.

■ Conventions and wording indicating referential information or referential locations

Tips Indicates referential information such as that for when the operating methods and procedures which are printed in these sentences are to be applied to specific conditions.

Indicates referential locations if there is information that should be referred to in this document or an extraneous User's Manual.

E.g.: For details about XX, see "1.2 Name and Functions of Each Part" (Page 2)

Safety Precautions

Observe the following descriptions to make full use of the performance of this product:

NOTICE

- Read this document thoroughly before operating the system to use it properly.
- Before connecting this product to the machine main unit, make sure that the power for the control unit is turned off.
- To maintain the shielding effect, firmly tighten the screws on the connectors of each connecting cable.
- To prevent defective contacts, do not touch the connecting terminals of the connectors with bare hands.

Precautions for Use

■ General safety precautions

● This product is a measuring instrument.

Do not use this product for any other purpose than measuring.

● This is an industrial product.

Do not use this product for any other purpose than industrial use.

● This product is a precision instrument.

Handle this product with extra care. Do not apply any strong impact or excessive force to the parts during use.

■ Required environment for installation

● Vibration

To install this product onto the machine main unit, select a location where there is as little vibration as possible.

If the scale unit is used for an extended period of time on a machine where there is a substantial amount of vibration, the built-in precision parts may be damaged, thereby adversely influencing the performance of the unit.

● Shock, dust, water protection

To protect the scale main unit from being directly exposed to machining oil and chips, or from being bumped by a workpiece, etc., prepare a cover that protects the entire scale main unit.

● Ambient temperature and humidity

This product should be operated in an environment where the temperature is 0 °C–45 °C and where the relative humidity is between 20 %–80 %RH. Do not use this product in a place where sudden changes in temperature or humidity are observed.

Electromagnetic Compatibility (EMC)

This product complies with the EU EMC Directive. Note that in environments where electromagnetic interference exceeds EMC requirements defined in this directive, appropriate countermeasures are required to ensure product performance.

This is an industrial product. Not intended for use in a residential environment. Use of this product in a residential environment may cause an electromagnetic interference with other instruments. In such a case, appropriate measures against electromagnetic interference are required.

Export Control Compliance

This product falls into the Catch-All-Controlled Goods and/or Catch-All-Controlled Technologies (including Programs) under Category 16 of Appended Table 1 of the Export Trade Control Order or under Category 16 of the Appended Table of Foreign Exchange Control Order, based on the Foreign Exchange and Foreign Trade Act of Japan.

If you intend re-export of the product from a country other than Japan, re-sale of the product in a country other than Japan, or re-provision of the technology (including program), you are obligated to observe the regulations of your country.

Also, if an option is added or modified to add a function to this product, this product may fall under the category of List-Control Goods and/or List-Control Technology (including Programs) under Category 1 - 15 of Appended Table 1 of the Export Trade Control Order or under Category 1 - 15 of the Appended Table of Foreign Exchange Control Order, based on Foreign Exchange and Foreign Trade Act of Japan. In that case, if you intend re-export of the product from a country other than Japan, re-sale of the product in a country other than Japan, or re-provision of the technology (including program), you are obligated to observe the regulations of your country. Please contact Mitutoyo in advance.

Notes on Export to EU Member Countries

When you intend to export this product to any of the EU member countries, you may be required to provide User's Manual(s) in English and EU Declaration of Conformity in English (under certain circumstances, User's Manual(s) in the destination country's official language and EU Declaration of Conformity in the destination country's official language). For detailed information, please contact Mitutoyo in advance.

Disposal of Products outside the European Union and Other European Countries

Please follow the official instruction in each community and country.

Disposal of Old Electrical & Electronic Equipment (Applicable in the European Union and Other European Countries with Separate Collection Systems)

This symbol on the product or on its packaging is based on the WEEE Directive (Directive on Waste Electrical and Electronic Equipment), which is a regulation in EU member countries, and indicates that this product shall not be treated as household waste.

To reduce environmental impact and minimize the volume of landfill, please cooperate in reuse and recycling.

For how to dispose of the product, please contact your dealer or the nearest Mitutoyo sales office.

China RoHS Compliance Information

This product meets China RoHS requirements. See the table below.

产品中有害物质的名称及含量

部件名称	有害物质					
	铅	汞	镉	六价铬	多溴联苯	多溴二苯醚
	(Pb)	(Hg)	(Cd)	(Cr(VI))	(PBB)	(PBDE)
本体	○	○	○	○	○	○
电气设备部分	×	○	○	○	○	○
配件	○	○	○	○	○	○

本表格依据 SJ/T 11364 的规定编制。

○: 表示该有害物质在该部件所有均质材料中的含量均在 GB/T 26572 规定的限量要求以下。

×: 表示该有害物质至少在该部件的某一均质材料中的含量超出 GB/T 26572 规定的限量要求。

环保使用期限标识是根据《电器电子产品有害物质限制使用管理办法》以及《电子电气产品有害物质限制使用标识要求(SJ/T11364–2014)》制定的,适用于中国境内销售的电子电气产品的标识。

电器电子产品只要按照安全及使用说明内容在正常使用情况下,从生产日期算起,在此期限内产品中含有的有毒有害物质不致发生外泄或突变,不致对环境造成严重污染或对其人身、财产造成严重损害。

产品使用后,要废弃在环保使用年限内或者刚到年限的产品,请根据国家标准采取适当的方法进行处置。

另外,此期限不同于质量/功能的保证期限。

Warranty

In the event that this product should prove defective in workmanship or material, within one year from the date of original purchase for use, it will be repaired or replaced, at Mitutoyo's option, free of charge upon its prepaid return to Mitutoyo, without prejudice to the provisions of the Mitutoyo Software End User License Agreement.

If this product fails or is damaged for any of the following reasons, it will be subject to a repair charge, even if it is still under warranty.

- Failure or damage owing to fair wear and tear
- Failure or damage owing to inappropriate handling, maintenance or repair, or to unauthorized modification
- Failure or damage owing to transport, dropping, or relocation of the instrument after purchase
- Failure or damage owing to fire, salt, gas, abnormal voltage, lightning surge, or natural disaster
- Failure or damage owing to use in combination with hardware or software other than those designated or permitted by Mitutoyo
- Failure or damage owing to use in ultra-hazardous activities

This warranty is effective only where the instrument is properly installed and operated in conformance with the instructions in this manual within the original country of the installation.

EXCEPT AS SPECIFIED IN THIS WARRANTY, ALL EXPRESS OR IMPLIED CONDITIONS, REPRESENTATIONS, AND WARRANTIES OF ANY NATURE WHATSOEVER INCLUDING, WITHOUT LIMITATION, ANY IMPLIED WARRANTY OF MERCHANTABILITY, FITNESS FOR A PARTICULAR PURPOSE, NONINFRINGEMENT OR WARRANTY ARISING FROM A COURSE OF DEALING, USAGE, OR TRADE PRACTICE, ARE HEREBY EXCLUDED TO THE MAXIMUM EXTENT ALLOWED BY APPLICABLE LAW.

You assume all responsibility for all results arising out of its selection of this product to achieve its intended results.

Disclaimer

IN NO EVENT WILL MITUTOYO, ITS AFFILIATED AND RELATED COMPANIES AND SUPPLIERS BE LIABLE FOR ANY LOST REVENUE, PROFIT, OR DATA, OR FOR SPECIAL, DIRECT, INDIRECT, CONSEQUENTIAL, INCIDENTAL, OR PUNITIVE DAMAGES HOWEVER CAUSED AND REGARDLESS OF THE THEORY OF LIABILITY ARISING OUT OF THE USE OF OR INABILITY TO USE THIS PRODUCT EVEN IF MITUTOYO OR ITS AFFILIATED AND RELATED COMPANIES AND/ OR SUPPLIERS HAVE BEEN ADVISED OF THE POSSIBILITY OF SUCH DAMAGES.

If, notwithstanding the foregoing, Mitutoyo is found to be liable to you for any damage or loss which arises out of or is in any way connected with use of this product by you, in no event shall Mitutoyo's and/ or its affiliated and related companies' and suppliers' liability to you, whether in contract, tort (including negligence), or otherwise, exceed the price paid by you for the product only.

The foregoing limitations shall apply even if the above-stated warranty fails in its essential purpose. BECAUSE SOME COUNTRIES, STATES OR JURISDICTIONS DO NOT ALLOW THE EXCLUSION OR THE LIMITATION OF LIABILITY FOR CONSEQUENTIAL OR INCIDENTAL DAMAGES, IN SUCH COUNTRIES, STATES OR JURISDICTIONS, MITUTOYO'S LIABILITY SHALL BE LIMITED TO THE EXTENT PERMITTED BY LAW.

About This Document

■ Positioning of this document in document map

● Linear scale related

AT211
Assembly Type Square Wave
Output Linear Scale
User's Manual (This Document)

■ Intended readers and purpose of this document

● Intended readers

This document is intended for beginners of AT211 Assembly Type Square Wave Output Linear Scale. They are also assumed to be able to understand individual instructions by reading dimensional schematics.

● Purpose

This document is aimed at understanding a basic knowledge of AT211 Assembly Type Square Wave Output Linear Scale.

Contents

1 Overview

This chapter describes the features of this product, names and functions of each part, and the flow of the main tasks to use this product.

1.1 Features

The assembly type linear scale uses the glass scales as the unit of length, to detect changes in the amount of light using light emitting elements and light receiving elements based on the grids, and to output the amount of changes as a square wave (pulse).

This can precisely measure moving amounts of various instruments including printed board drill punching machines, laser machines, and surface grinding machines.

This product is a slim shield-type scale that can be connected directly to a control unit. It supports a wide range of resolutions from 0.1 μm–5 μm and delivers high-speed response of up to 120 m/min (2000 mm/s). This scale is also equipped with the scale alarm indication function for easy maintenance.

This product has the following two types and specifications with different effective measuring lengths.

- Type for fixing at multiple points with excellent vibration resistance or impact resistance
- Type for fixing at both ends for space-saving installation

1.2 System Configuration and Name of Each Part

The system configuration and the name of each part are shown below.

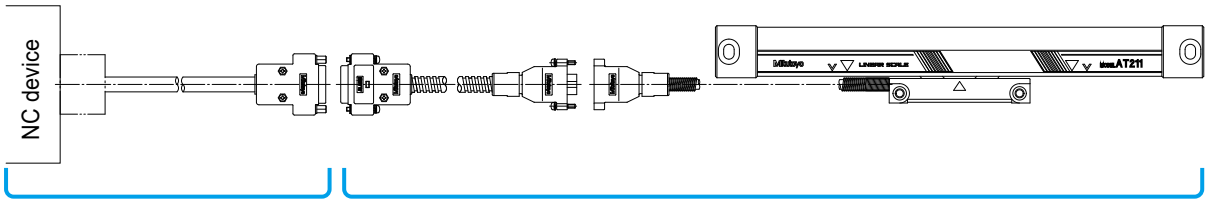

Tips

The one detector cable type (without connector) does not include the signal cable.

■ Fixing at multiple points

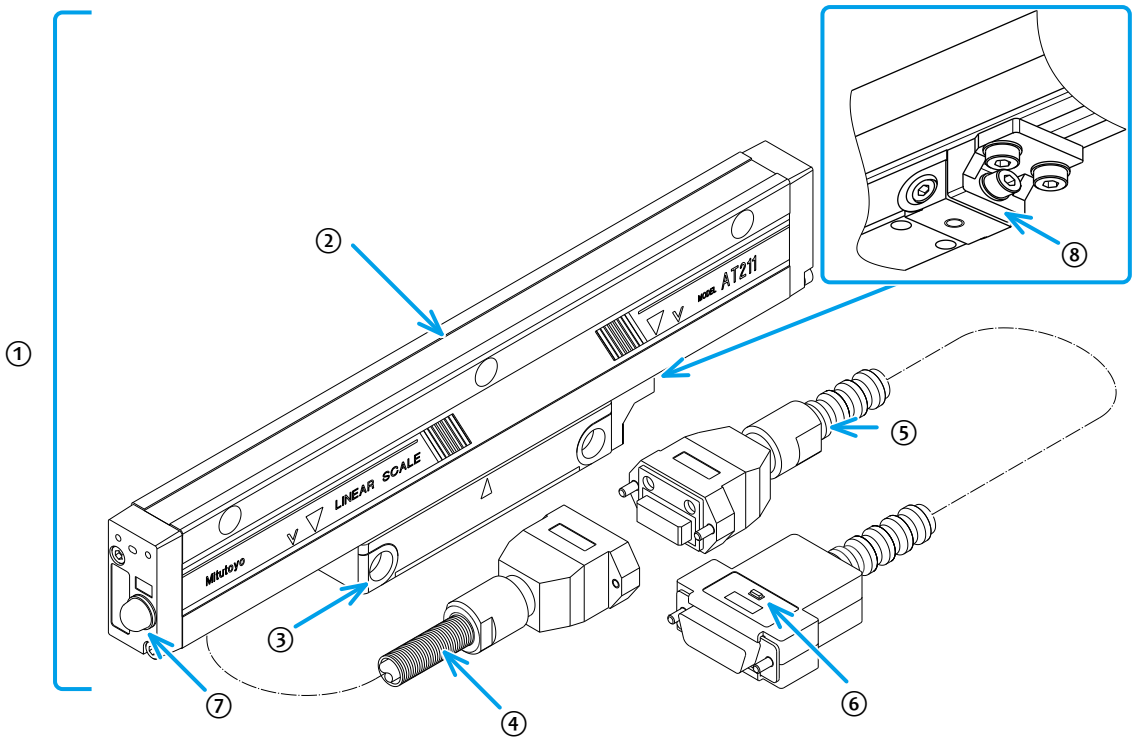

No.	Name
①	Scale unit
②	Scale main unit
③	Detector
④	Detector cable
⑤	Signal cable
⑥	Scale alarm indication LED
⑦	Air supply inlet
⑧	Detector fixing block

■ Fixing at both ends

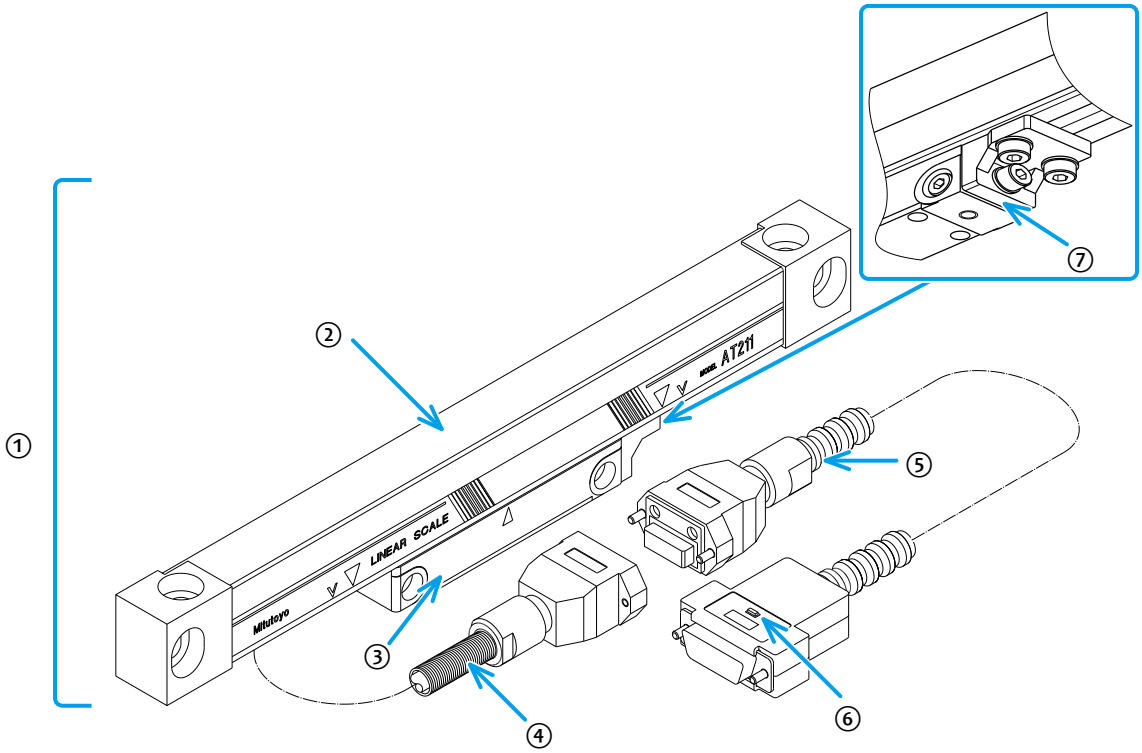

No.	Name
①	Scale unit
②	Scale main unit
③	Detector
④	Detector cable
⑤	Signal cable
⑥	Scale alarm indication LED
⑦	Detector fixing block

1.3 The Flow of Main Tasks

The following chart shows the flow of preliminary preparation and installation onto the machine main unit as tasks to use this product.

■ Preliminary preparation

Checking the Equipment Model

"2.1 Checking the Equipment Model" (page 5)

Designing the Installation of the Scale Unit

"2.2 Designing the Installation of the Scale Unit" (page 8)

■ Installation onto the machine main unit

Checking the Package Contents

"3.1 Checking the Package Contents" (page 15)

Mounting the Scale Main Unit and Adjusting the Position

"3.2 Mounting the Scale Main Unit and Adjusting the Position" (page 16)

Mounting the Detector and Adjusting the Position

"3.3 Mounting the Detector and Adjusting the Position" (page 20)

Connecting and Fixing the Signal Cable

"3.4 Connecting and Fixing the Signal Cable" (page 22)

2 Setup for Installation

This chapter describes the preliminary preparation for installing this product onto the machine main unit.

2.1 Checking the Equipment Model

The AT211 model number is determined based on the effective length, installation method, scale reference point, indication accuracy, resolution/minimum edge interval/response speed, direction, detector cable, and signal cable.

Make sure that your scale unit model satisfies desired specifications.

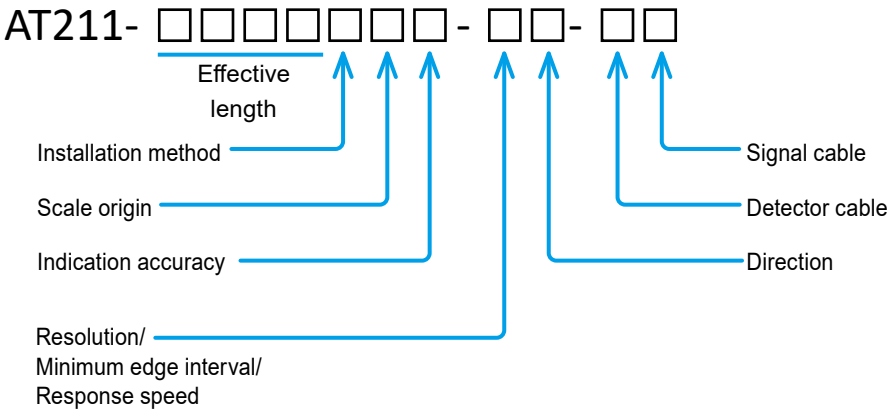

■ Effective length

Symbol	Effective length (mm)
0100	100
0150	150
0200	200
0250	250
0300	300
0350	350
0400	400
0450	450
0500	500
0600	600
0700	700
0750	750
0800	800
0900	900
1000	1000
1100	1100

Symbol	Effective length (mm)
1200	1200
1300	1300
1400	1400
1500	1500

Installation method

Symbol	Installation method
A	Fixing at multiple points
B	Fixing at both ends

Scale reference point

Symbol	Scale reference point
1	50-mm pitch
2	Center point
3	Left edge point
4	Right edge point

Indication accuracy

Symbol	Indication accuracy
S	$(3+3L_0/1000)$ µm
H	$(2+2L_0/1000)$ µm

Tips

- L_0 refers to the effective length (mm).
- Type H applies to a scale unit with an effective length of 500 mm or less.

Specification combination

Minimum edge interval (ns) / Resolution (µm)	125	250	333	500	1000
0.1	A: 43 (710)	B: 22 (360)	C: 16 (260)	D: 11 (180)	E: 5.4 (90)
0.2	F: 86 (1400)	G: 43 (710)	H: 32 (530)	J: 22 (360)	K: 11 (180)
0.5	L: 120 (2000)	M: 110 (1800)	N: 81 (1300)	P: 54 (900)	Q: 27 (450)
1.0	-	R: 120 (2000)	S: 120 (2000)	T: 110 (1800)	U: 54 (900)
2.5	-	-	-	W: 120 (2000)	X: 120 (2000)
5.0	-	-	-	-	Y: 120 (2000)

Tips

- The numbers for symbols A to Y refer to the maximum response speed (m/min). The unit of a number enclosed in parentheses is mm/s.
- The minimum edge interval varies within the range between 0% and -10% depending on the operating condition.

Direction

Symbol	Direction
1	Forward: PA phase advance
2	Reverse: PB phase advance

Detector cable

Symbol	Length (m)	Coil spring	Connector
A	0.3	Available	Self-water-proof
B	0.3	Not available	
C	1		
D	3	Not available	Not avail-able
E	4		
F	5		
H	7		
J	8		
K	9		

Tips

Non-coil spring cables are vinyl coated.

Signal cable

Symbol	Length (m)	Metal flexible
A	3	Available
B	3	Not available
C	5	Available
D	5	Not available
E	7	Available
F	7	Not available
G	3	Not available
H	5	Not available
J	7	Not available
X	No signal cable	

Tips

- Non-metal flexible cables are vinyl coated.
- A half-pitch connector is used on the feedback cable side for G, H, and J.

2.2 Designing the Installation of the Scale Unit

2.2.1 Scale Main Unit Mounting Directions and Cover Preparations

When installing this product, be sure to install the cover so that cutting oil, chips, etc. do not splatter onto the scale main unit.

Only the dust proof-rubber lips are used to protect the opening side of the scale main unit from the intrusion of foreign objects. Therefore, when deciding the mounting direction of the scale main unit, give consideration to the splattering directions of the cutting oil, chips, etc., since the opening side poses a greater hazard of foreign matter intrusion than the other sides.

■ The direction from which the cutting oil, chips, etc. tend to intrude

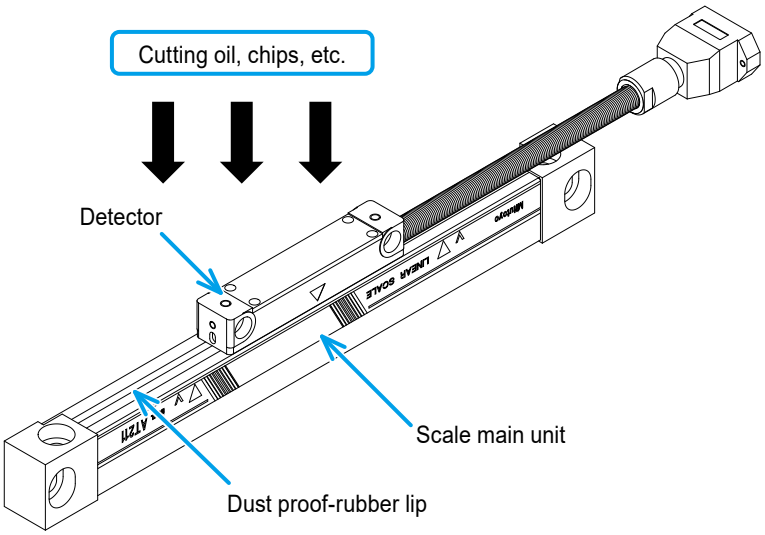

■ The direction from which the cutting oil, chips, etc. tend not to intrude

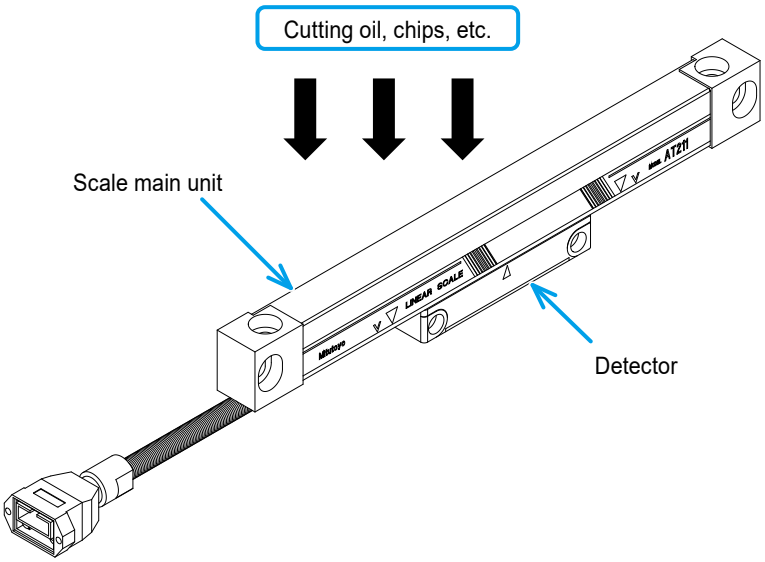

■ Mounting direction of the scale main unit

● Longitudinal direction

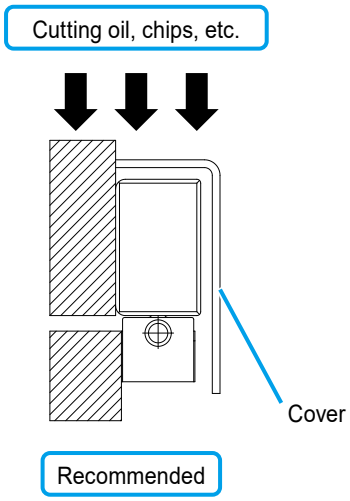

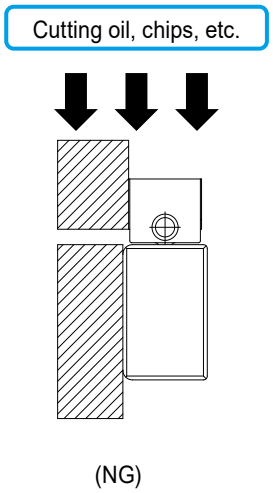

● Horizontal direction

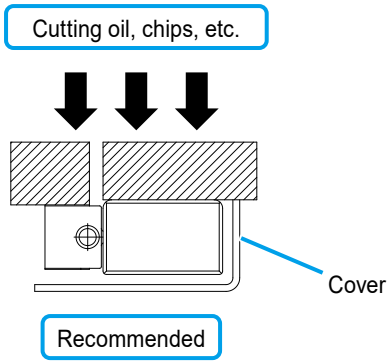

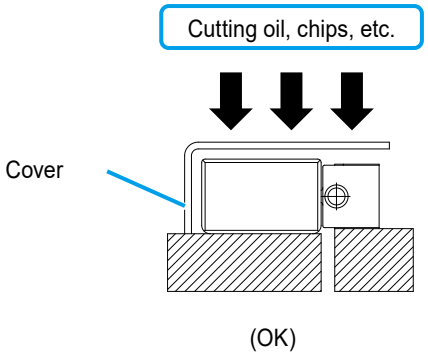

● Vertical direction

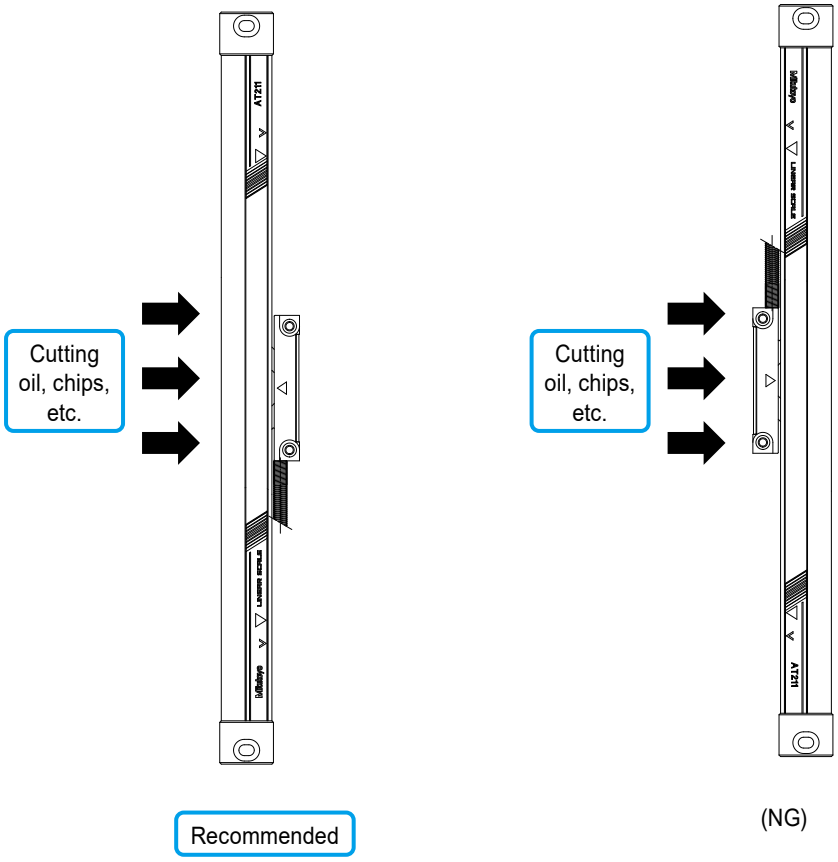

- If the scale unit is directly exposed to machining oil and chips, prepare a cover that protects the entire scale unit regardless of the mounting direction. When deciding the cover shape, give consideration to the splattering of the cutting oil and chips on the opening side.
- Fully take the actual movement of the scale unit into account and make sure that the cover does not touch other objects across the entire stroke.

2.2.2 Checking the Maximum Travel Distance and Effective Length

Make sure that the scale's maximum travel distance (L_1) is greater than the maximum travel distance of the machine.

For details about the effective length (L_0) and the maximum moving amount (L_1), see "4.6 External View and Dimensional Drawings of the Scale Main Unit" (page 38)

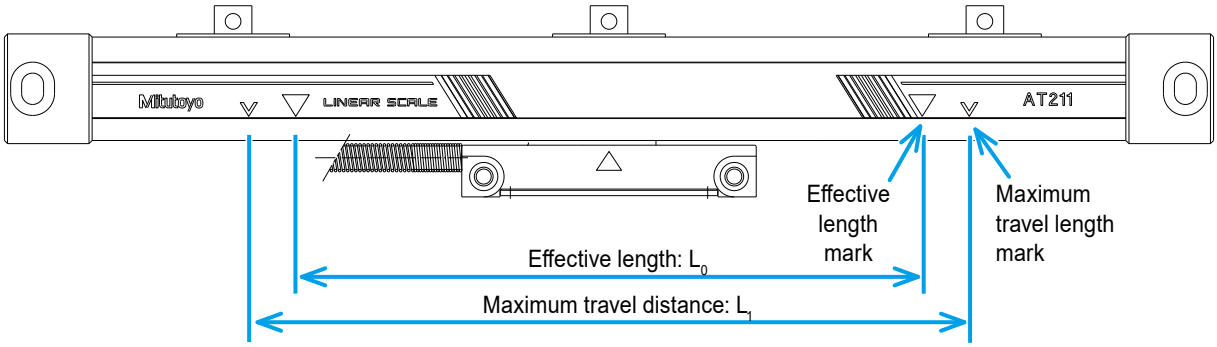

NOTICE

Be sure to check the maximum travel distance of the scale unit, but not the automatic feed rate of the machine. Failure to do so will result in damage to the scale unit.

Tips

- The specified accuracy guaranteed range is limited to within the effective length.
- When checking the travel range of the scale main unit installed on the machine, make sure that the maximum travel range of the machine main unit does not exceed the L_1 shown above, and that the required accuracy range is within the L_0 shown above.
- If the maximum travel distance or the effective length of the scale main unit is insufficient, one of the following actions is required:
  - Reduce the travel distance of the machine by installing a mechanical stopper or changing the limit switch position.
  - Change the scale size.

2.2.3 Checking the Mounting Direction

Install the scale unit in the direction shown in the figure below. During installation, pay attention to the unmounting direction of the detector cable. To reverse the unmounting direction of the detector cable, reverse the scale unit itself.

■ Fixing at multiple points

Normal mounting direction

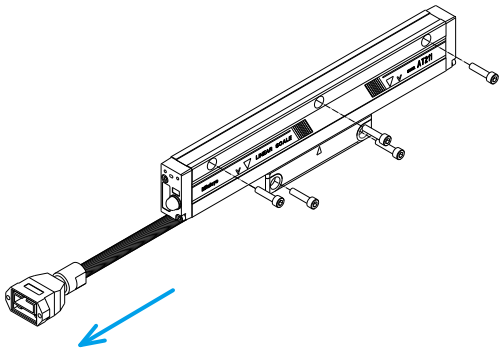

Cable pulling direction

Reverse unmounting direction

Cable pulling direction

180-degree rotation

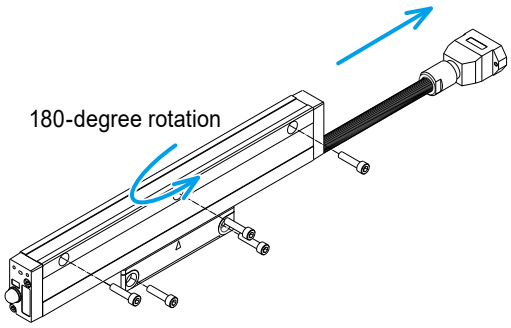

■ Fixing at both ends

Normal mounting direction

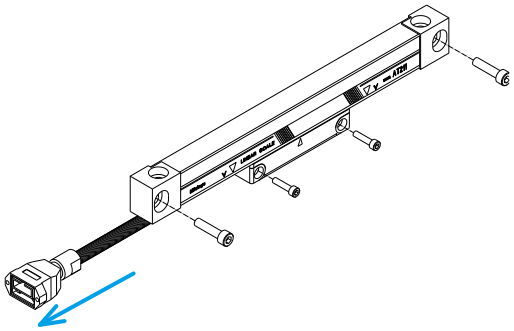

Cable pulling direction

Reverse unmounting direction

Cable pulling direction

180-degree rotation

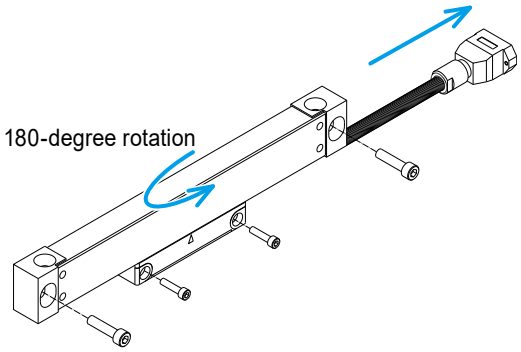

2.2.4 Installing the Intermediate Support

Tips

Install the intermediate support for a scale unit that is fixed at both ends and has an effective length of 500 mm or more.

Use the following procedure to install the intermediate support on the scale main unit.

■ To fix the scale main unit using mounting hole A

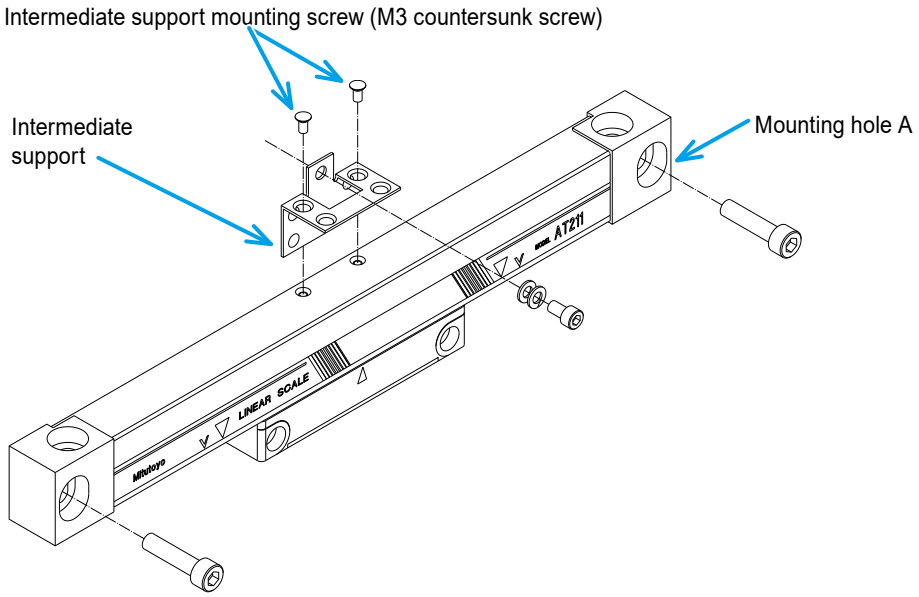

■ To fix the scale main unit using mounting hole B

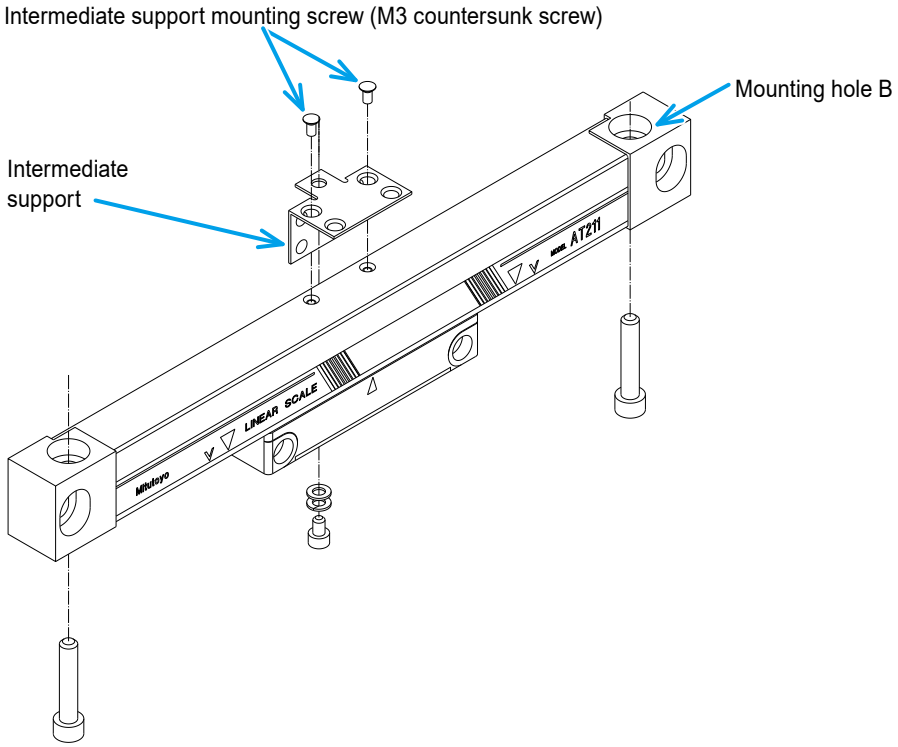

2.2.5 Precautions on Designing the Mounting Surface

The following describes precautions on designing the mounting surface.

For details about the mounting specifications, see "4.6 External View and Dimensional Drawings of the Scale Main Unit" (page 38)

For details about the mounting procedures, see "3 Installation onto the Machine Main Unit" (page 15)

■ Precautions

- The mounting surfaces of the scale main unit and the Detector must be machine-processed to be that. The following shows tolerances on the machine surfaces.

● Fixing at multiple points

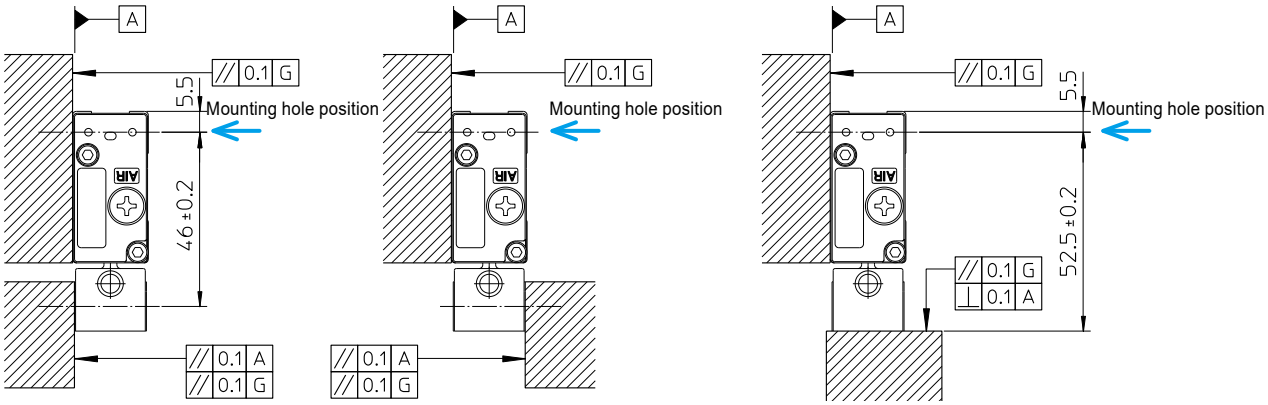

G: Machine guide

● Fixing at both ends

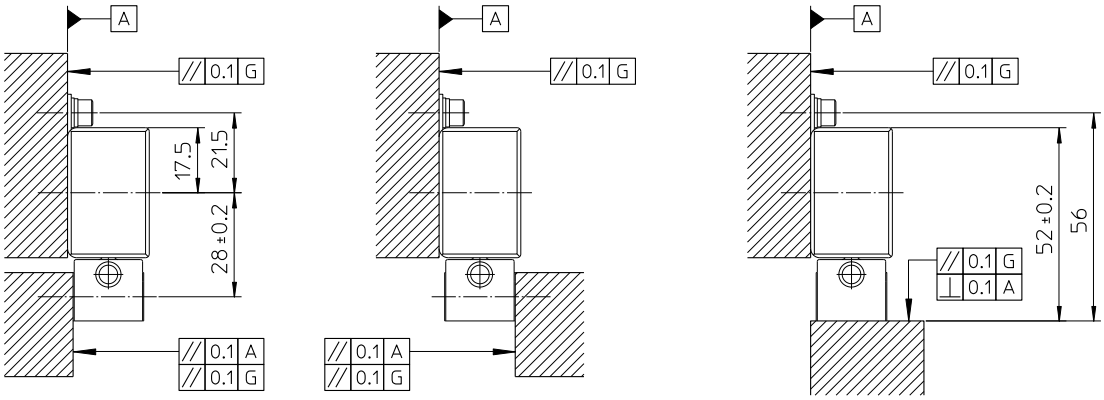

G: Machine guide

- Use the detector fixing block to adjust the clearance between the scale main unit and the Detector.
- If there is a gap between the Detector and the mounting surface, select the most appropriate spacer from the supplied ones (thickness = 0.3/0.4/0.5/0.6 mm) and insert it in between them.

3 Installation onto the Machine Main Unit

This chapter describes the procedures, methods, and precautions required when mounting this product onto the machine main unit.

3.1 Checking the Package Contents

Before installation, make sure that the product package contains the following items.

If your scale unit does not satisfy the specified specifications or you have any questions or concerns about the product, please contact your dealer or the nearest Mitutoyo sales office/service center.

Tips

The accessories of this product are different depending on the specifications of the scale main unit.

Item	Quantity	Note
Scale unit	One axis	
Signal cable	One cable	3 m, 5 m, or 7 m. This is not supplied for the one detector cable type (without connector).
Accessories	One set	Mounting screws, spacers, and intermediate supports. For details about the quantity of each accessory, see "6.1 Quantity of the Supplied Accessories for Installation" (pages 45 and 46)
Connector set	One set	This is not supplied for the one detector cable type (without connector).
User's Manual	One copy	This document
Warranty card	One copy	
Inspection certificate	One copy	

3.2 Mounting the Scale Main Unit and Adjusting the Position

3.2.1 Temporarily Fixing the Scale Main Unit

- The mounting surface of the scale main unit must be machine-processed to be that.
- The detector fixing block that fixes the Detector defines the positional relationship between the scale main unit and the Detector. When mounting the scale unit on the machine main unit, do not remove the detector fixing block in order to keep the positional relationship.

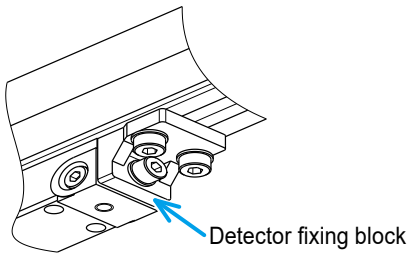

1 Punch holes for fixing screws on the mounting surface of the scale main unit.

For details about the locations of fixing screw holes, see "4.6 External View and Dimensional Drawings of the Scale Main Unit" (page 38)

2 Temporarily fix the scale main unit with the supplied fixing screws.

Tips

Tighten the fixing screws so that the scale main unit does not move even when you release the hand from the scale.

■ Fixing at multiple points

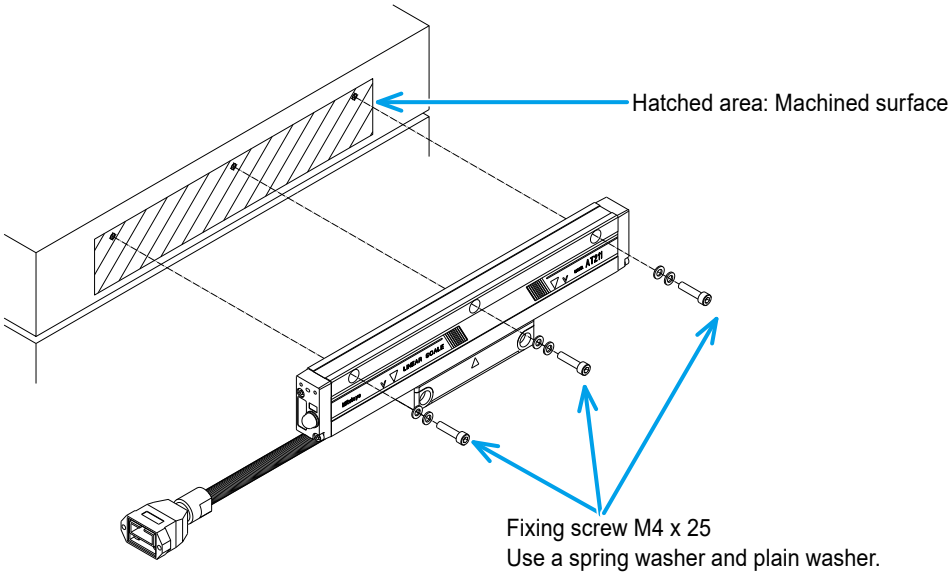

Fixing at both ends

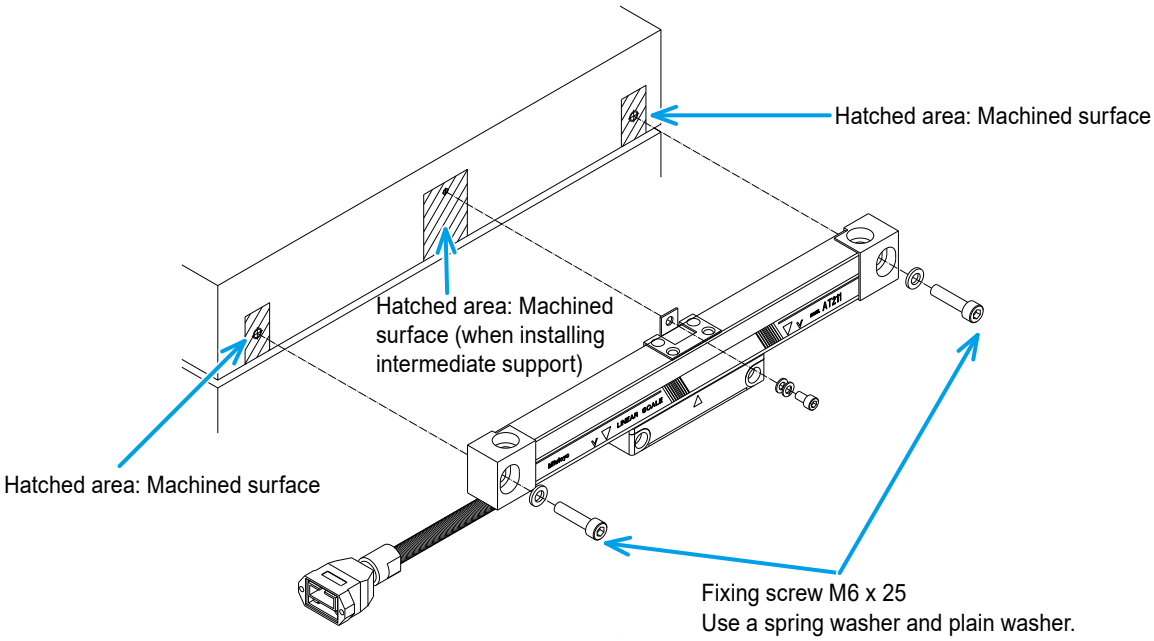

Install the intermediate support for a scale unit that is fixed at both ends and has an effective length of 500 mm or more.

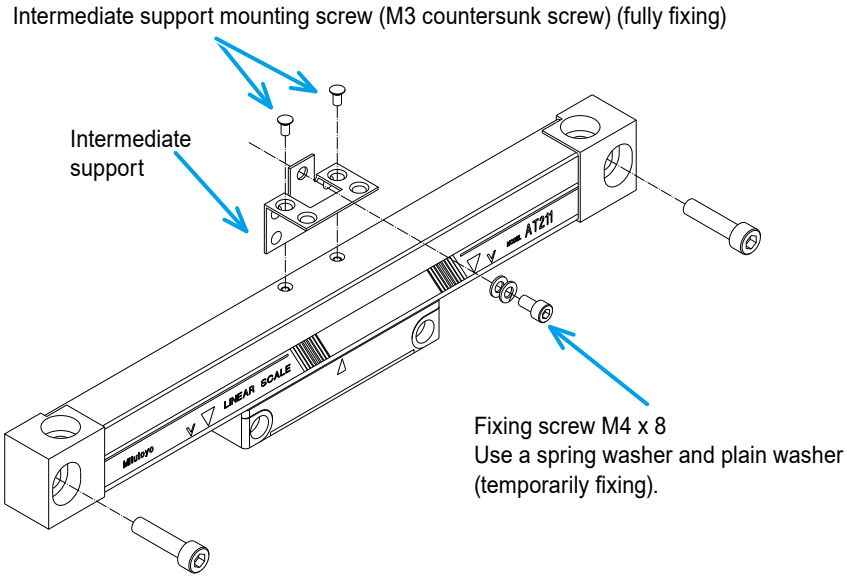

3.2.2 Checking and Adjusting the Parallelism

1 Place a dial indicator or some other measuring instrument near the effective length mark (▽) on the scale main unit and check and adjust the parallelism of the scale against the machine guide.

Item	Description
Measurement location	Two locations near the effective length marks
Check direction	Forward, backward, upward, and downward directions of the mounting surface of the scale main unit
Parallelism allowance	"4.6 External View and Dimensional Drawings of the Scale Main Unit" (page 38)

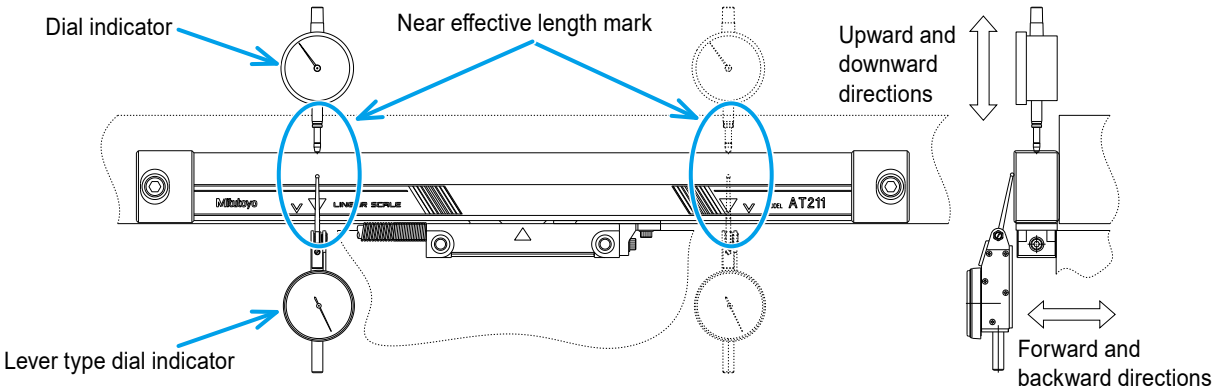

Tips

- Check the parallelism of the scale main unit by moving the machine's movable parts, such as the slide table, with your hand.
- The check directions are the same for both fixing at multiple points and fixing at both ends.

■ Checking the intermediate support

- You need to check the intermediate support for a scale unit that is fixed at both ends and has an effective length of 500 mm or more.
- If the intermediate support touches the dial indicator when you move the slide table or some other part, release the spindle by pushing it up.

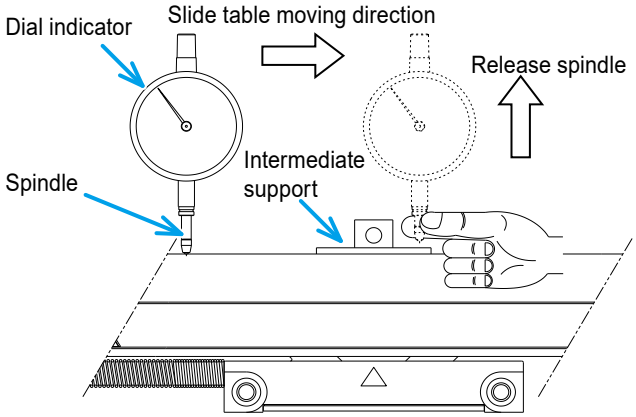

1 Move the dial indicator to near the intermediate support and check the parallelism of the scale main unit against the machine guide.

Item	Description
Measurement location	Scale main unit near the intermediate support
Check direction	Forward, backward, upward, and downward directions of the mounting surface of the scale main unit
Parallelism allowance	"4.6 External View and Dimensional Drawings of the Scale Main Unit" (page 38)

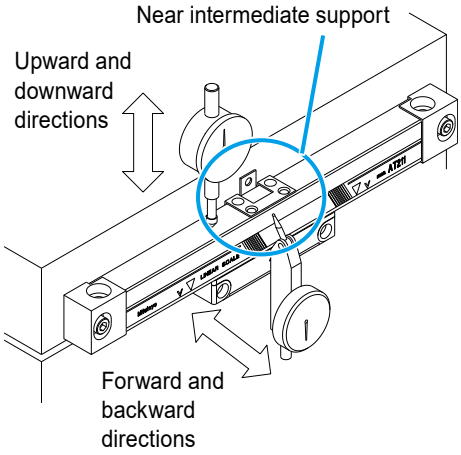

3.2.3 Fully Fixing the Scale Main Unit

1 After checking and adjusting the parallelism of the scale main unit, fully tighten the fixing screws on the scale.

- When the intermediate support is used, tighten the fixing screws on the support as well.
- The tightening torque for fixing screws is as follows:
  - M4 screw (for fixing at multiple points and intermediate support): 3 N•m
  - M6 screw (for fixing at both ends) 9 N•m

3.3 Mounting the Detector and Adjusting the Position

After completing the steps described in "Mounting the Scale Main Unit and Adjusting the Position", follow the procedures below to install the Detector.

3.3.1 Mounting the Detector

1 Check the parallelism of the Detector mounting surface.

For details, see "4.6 External View and Dimensional Drawings of the Scale Main Unit" (page 38)

2 Temporarily fix the Detector with the supplied detector fixing screws.

■ Fixing at multiple points

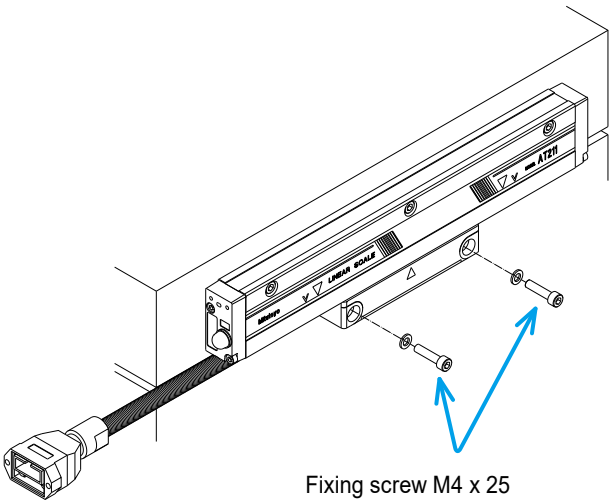

Fixing screw M4 x 25
Use a spring washer and plain washer.

■ Fixing at both ends

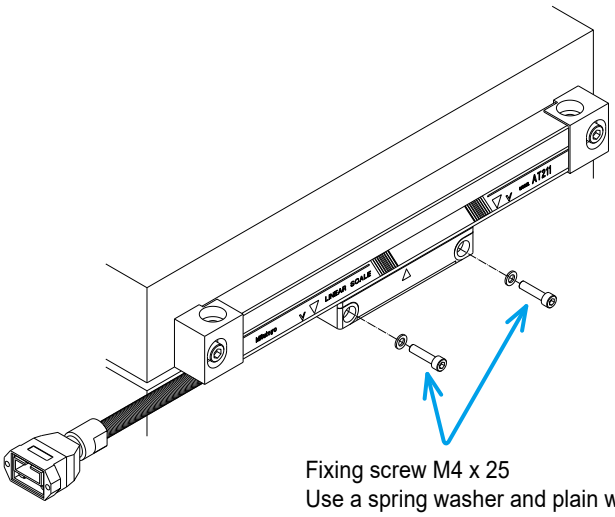

Fixing screw M4 x 25
Use a spring washer and plain washer.

If there is a gap between the Detector and the mounting surface, select the most appropriate spacer from the supplied ones (thickness = 0.3/0.4/0.5/0.6 mm) and insert it in between the Detector and the mounting surface.

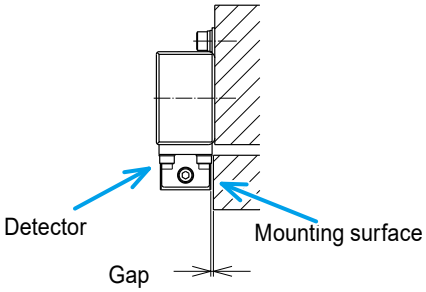

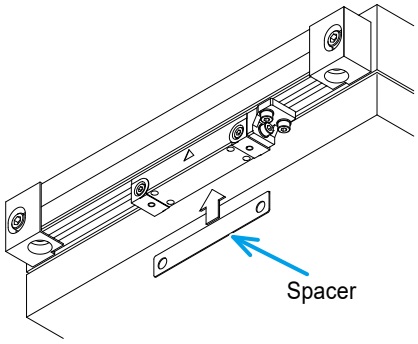

3 Remove the screws (three locations) that fix the detector fixing block.

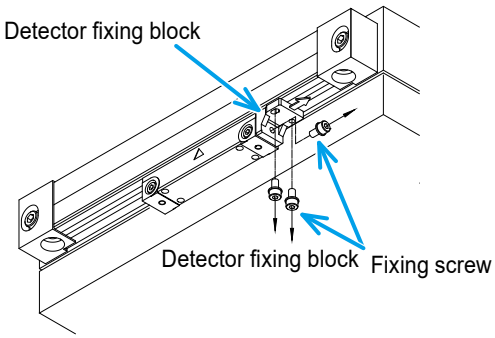

4 Fully fix the Detector with the supplied screws.

NOTICE

If you fully tighten the screws for fixing the Detector without inserting the spacer although there is a gap between the Detector and the mounting surface, the scale unit may be damaged.

5 Make sure that the detector fixing block can be smoothly removed and inserted and there is no gap between the Detector and the mounting surface.

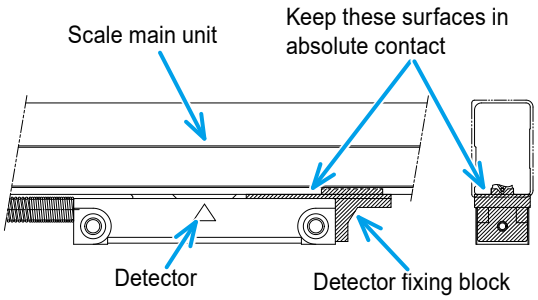

3.4 Connecting and Fixing the Signal Cable

3.4.1 Connecting the Signal Cable

Tips

- Make sure that the connecting direction of the connector is correct.
- The connector is waterproof, but if it is not fully plugged, it may cause malfunctions.

1 Connect the detector cable and the signal cable.

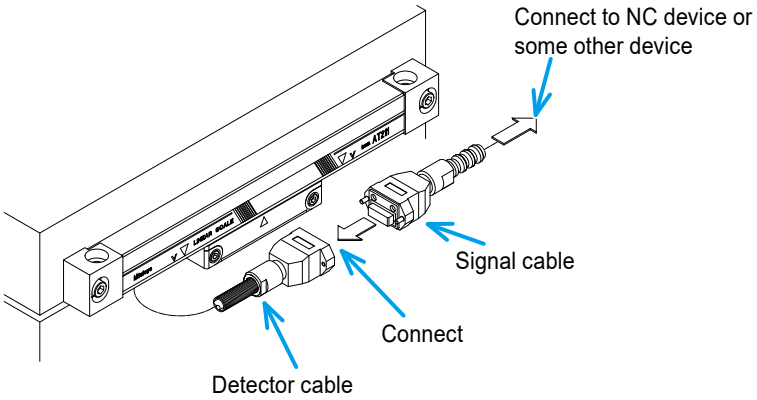

2 Connect the signal cable to the NC device.

For details, see "4.4 Production of Feedback Cable" (page 29)

3 Make sure the screws on the connector plug are fully tightened.

4 After connection of cables etc. is completed, turn on the power and check the operations, functions, and performance of the scale unit.

Tips

- After turning on the power, if the scale unit does not operate normally, check the connections first. If the scale does not operate normally even after the status of connections is checked and the power is supplied again, investigate the cause.
  For details, see "5 Troubleshooting" (page 43)
- When checking the scale unit operations, be very careful that no cables are being pinched by the machinery.
- When connecting the connectors, if chips or other foreign objects are sandwiched in, that may cause malfunctions.

3.4.2 Handling the Cables

Be sure to note the following content when fixing the cables.

1 Wire the detector cable and signal cable while paying attention to the twisting or bends of the cables.

NOTICE

Note that the detector cable, signal cable, and feed back cable may malfunction if bundled with other cables that may cause electrical noise, or if they are located near a switching relay dealing with a large current.

2 Fix the plug between the detector cable and signal cable (self-waterproof connector part), and the signal cable itself with the supplied cable clamps.

NOTICE

The bend radius of the signal cable must be greater than the following value. If the bend radius exceeds the allowable range, it could result in breakage of the wires or other problems. Also, note with caution that the scale is no longer guaranteed in such a case.

- Fixing the signal cable (the Detector is fixed): Bend radius = 50 mm or more

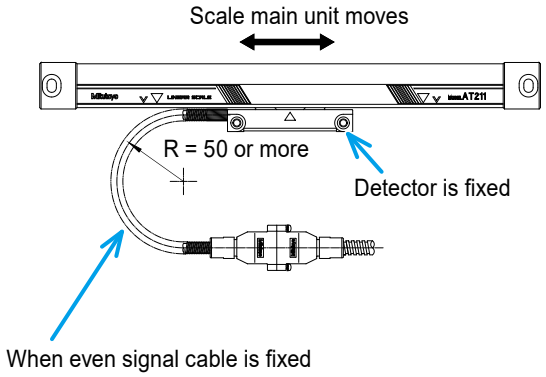

- Repeatedly bending the signal cable (the Detector moves): Bend radius = 100 mm or more

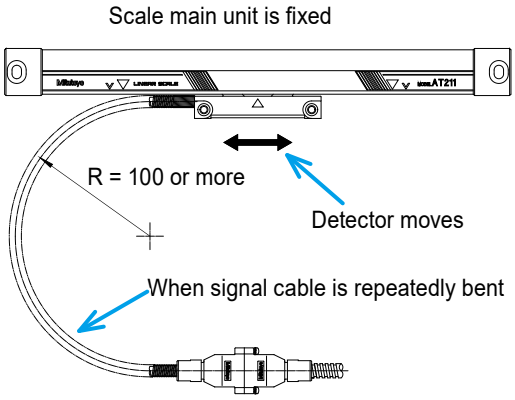

3 Wire the feedback cable (prepared by the user) with some allowances and fix it with cable clamps.

Tips

- Check that excessive force is not applied to the detector cable, signal cable, and feedback cable throughout the entire stroke. In particular, make sure that they are not in contact with the parts such as the cover attached to protect the scale unit.
- Consider the shake due to vibration, etc. given to connectors.

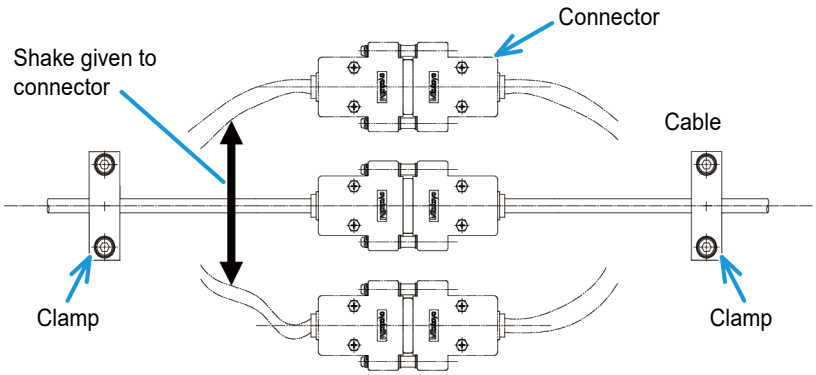

- Do not bend the cables.
- If the cables are going to be repeatedly bent, try to reduce stress applied to near the root of the clamping part.

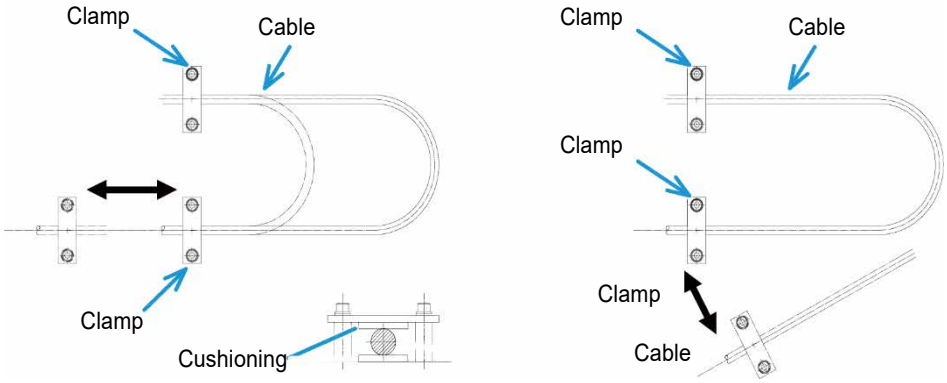

4 Specification

4.1 Specifications

Item		Specification
Effective length (L_0)		100, 150, 200, 250, 300, 350, 400, 450, 500, 600, 700, 750, 800, 900, 1000, 1100, 1200, 1300, 1400, 1500 mm
Scale reference point		50-mm pitch, center point, left edge point, or right edge point (determined when shipped)
Indication accuracy (20 °C)		(3 + $3L_0$/1000) µm (When $L_0 \leqq 500$ mm, a high precision type with (2+$2L_0$/1000) µm can also be produced.) L_0: Effective length (mm)
Vibration resistance (55 Hz—2000 Hz)		200 m/s² * Only for fixing at multiple points
Shock resistance (1/2 sin, 11 ms)		250 m/s² * Only for fixing at multiple points
Air supply		Available * Only for fixing at multiple points
Output signal	Type	PA/$\overline{PA}$, PB/$\overline{PB}$, PZ/$\overline{PZ}$
	Electrical specification	Compliance with RS422
Main scale grid pitch		20 µm
Minimum resolution		0.1, 0.2, 0.5, 1, 2.5, 5 µm (fixed when shipped)
Minimum edge interval		125, 250, 333, 500, 1000 ns (fixed when shipped)
Maximum response speed		5.4 m/min—120 m/min (Determined based on minimum resolution and minimum edge interval)
Power supply voltage		5 VDC ±5 %
Maximum current consumption		200 mA
Sliding force		5 N or less
Used temperature range		0 °C—45 °C
Storage temperature range		-20 °C—70 °C
Used/storage humidity range		20 %—80 % RH (non condensation)
Direction switch		Forward/reverse (set when shipped)
Alarm function	Alarm detection	Over speed, scale signal error
	Alarm output	High impedance for all PA/$\overline{PA}$, PB/$\overline{PB}$, and PZ/$\overline{PZ}$ output
	Alarm indication	Steady red LED on signal cable NC connector (D-sub connector) * Except for one detector cable type (without connector)
CE Marking		EMC Directive: EN 61326-1 Immunity test requirement: Clause6.2 Table 2 Emission limit: Class B RoHS Directive: EN IEC 63000

4.2 Cable Specifications

4.2.1 Signal Cable

■ Connection diagram

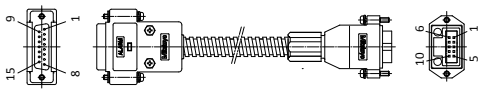

D-sub connector

Waterproof square connector

External view of signal cable

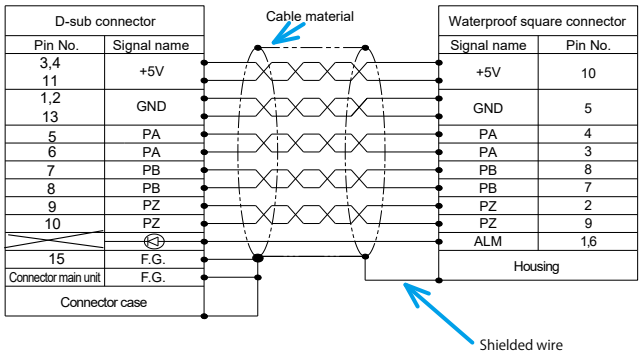

Connection diagram of signal cable

■ D-sub connector

Applicable connector: HDAB-15S (Hirose Electric product or equivalent product (D-sub series) can be used)

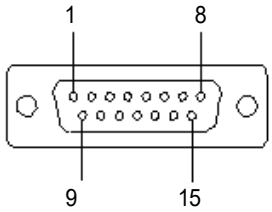

Pin No.	Signal	Pin No.	Signal
1, 2, 13	0 V	8	$\overline{PB}$
3, 4, 11	+5 V	9	PZ
5	PA	10	$\overline{PZ}$
6	$\overline{PA}$	12, 14	Unused
7	PB	15	F.G.

■ Output diagram

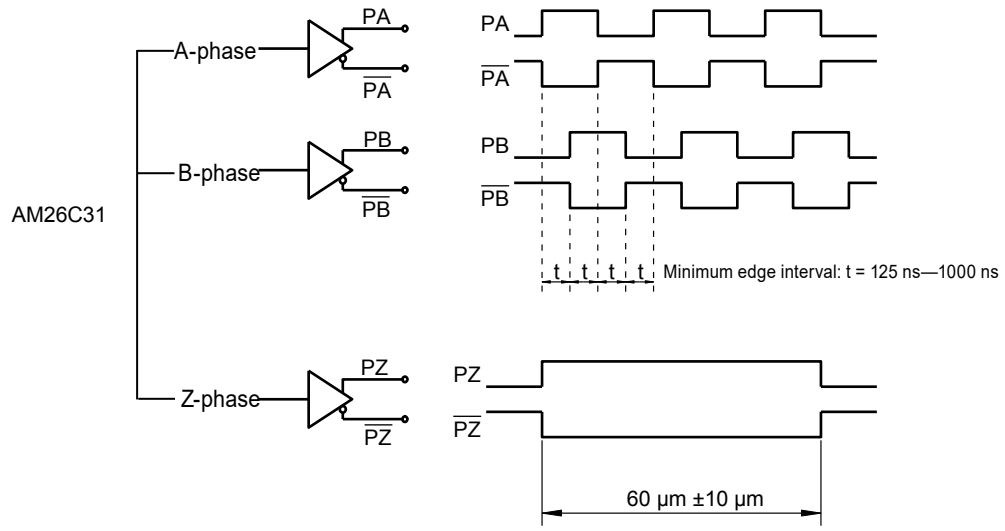

4.2.2 One Detector Cable Type

■ Connection diagram

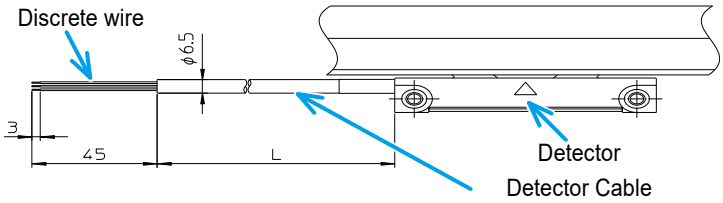

Wire color	Signal	Wire color	Signal
White, black	0V	Blue	$\overline{PB}$
Brown, red	+5 V	Purple	PZ
Orange	PA	Gray	$\overline{PZ}$
Yellow	$\overline{PA}$	Pink	$\overline{ALM}$
Green	PB		

■ Output circuit specifications

$\overline{ALM}$ signal

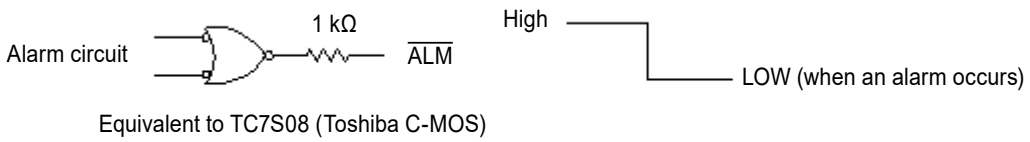

Equivalent to TC7S08 (Toshiba C-MOS)

4.3 DIP Switch Settings

You can switch the direction with the DIP switch on the Detector board.

1 Remove the screws (four locations) that fix the Detector cover.

2 Change the switch 4 setting with DIP switch 1 on the board.

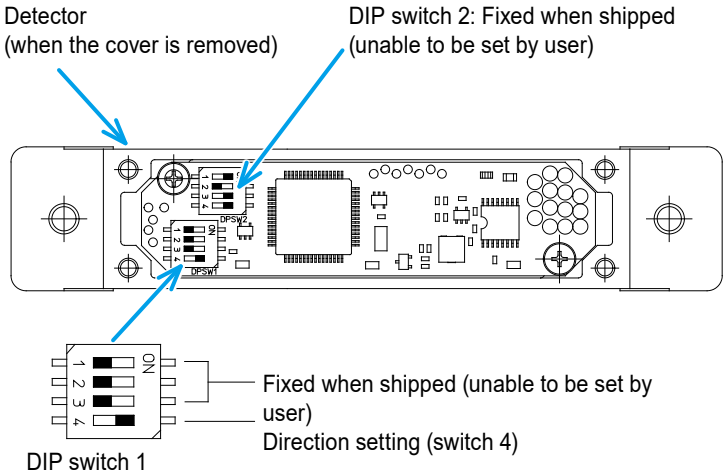

Tips

- Do not change the switch 1—3 setting with the DIP switch 1 (fixed when shipped). If you changed the setting by mistake but do not know the default setting, please contact the nearest Mitutoyo sales office/service center before turning on the system.
- Do not change the switch 2 setting (fixed when shipped). If you changed the setting by mistake but do not know the default setting, please contact the nearest Mitutoyo sales office/service center before turning on the system.

Tips

When you turn on switch 4 on DIP switch 1, the PA phase is set to phase advance as follows.

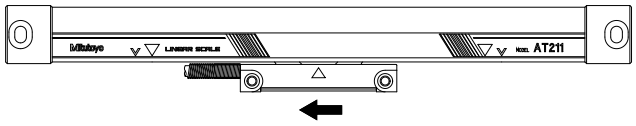

Detector move direction

When switch 4 is ON: PA phase: Phase advance

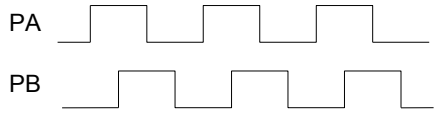

When switch 4 is OFF: PB phase: Phase advance

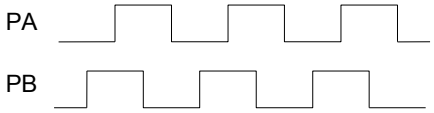

3 Fix the Detector cover with the screws (four locations). (Screw tightening torque: 0.18 N·m)

4.4 Production of Feedback Cable

A feedback cable is required (prepared by the user) to connect this product to an NC device or some other device.

Tips

A feedback cable is unnecessary for the one detector cable type (without connector). Attach a connector specified by the NC device or some other device you want to connect to the top end (discrete-wire part) of the cable.

For the connection diagram for the one detector cable type, refer to "4.2.2 One Detector Cable Type" (page 27)

The parts required to make a feedback cable are shown below.

Name	Specification
Connector for signal cable	This is supplied with this product (socket contact, 15 pins). This part is unnecessary for the one detector cable type (without connector).
Connector for NC device	This is not supplied with this product. Prepare a connector specified by the NC device you want to connect.
Cable material (recommended)	Model number: A66L-0001-0286 Manufacturer: Hitachi Cable or Oki Electric Cable

- When using any cable other than the above recommended cable, make sure to use a shield cable with the total amount of the impedance of the power supply line (+5 V and 0 V) to "0.65 Ω or less/ total length".
- Install the signal cable so that cutting oil, chips, etc. do not splatter onto the D-sub connector plug. The D-sub connector of the signal cable has the scale alarm indicator LED (steady red on alarm). Wire the cable so that the LED indication can be seen.
- Use the feedback cable at a location where no repeated bending occurs.

4.4.1 Appearance Image of Feedback Cable and Grounding to Ground Bar

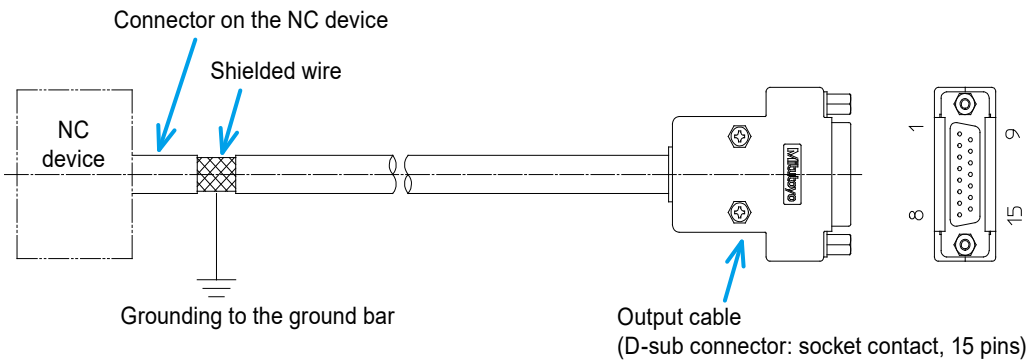

When assembling the D-sub connector, make sure to conduct electricity from the cable shielded wire to the metal shell. Also, peel part of the sheath (coating) of the cable on the NC device and make sure to use the ground bar to ground the shielded wire.

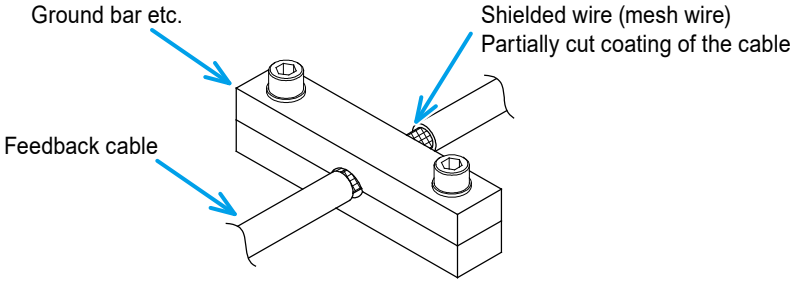

4.4.2 Assembly of D-Sub Connector

1 Cut the sheath (coating) of the cable material into the length of the following figure.

Make sure not to damage the internal shielded wire.

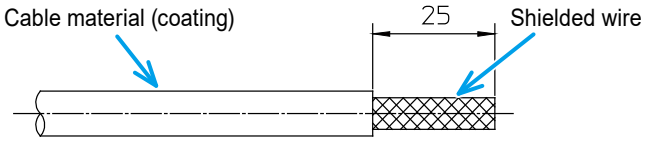

2 Untangle the exposed shielded wire to spread radially and cut it against the sheath.

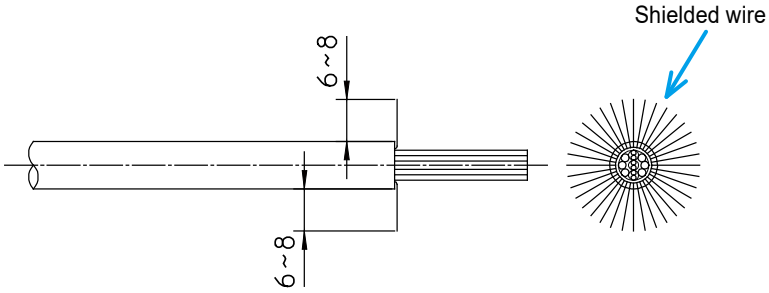

3 Peel the tip of the coating of the wire about 3 mm, and make a preliminary solder after twisting the conducting wires.

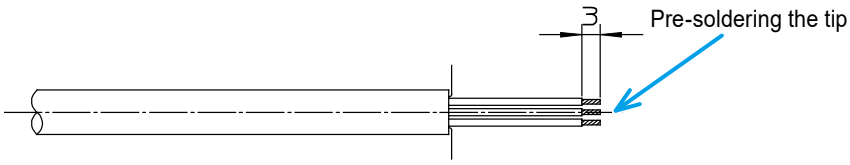

4 Solder each line to D-sub connector (socket contact, 15 pins/supplied accessory).

Insert a vinyl tube (ø2 mm, L = 6 mm—8 mm) or heat shrinkable tube into each terminal part.
Bend the shielded wire to the sheath.

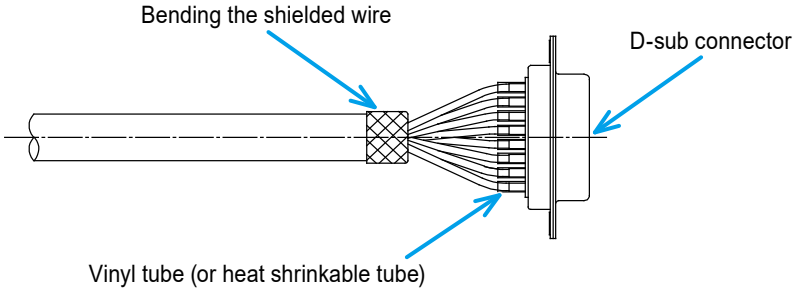

Tips

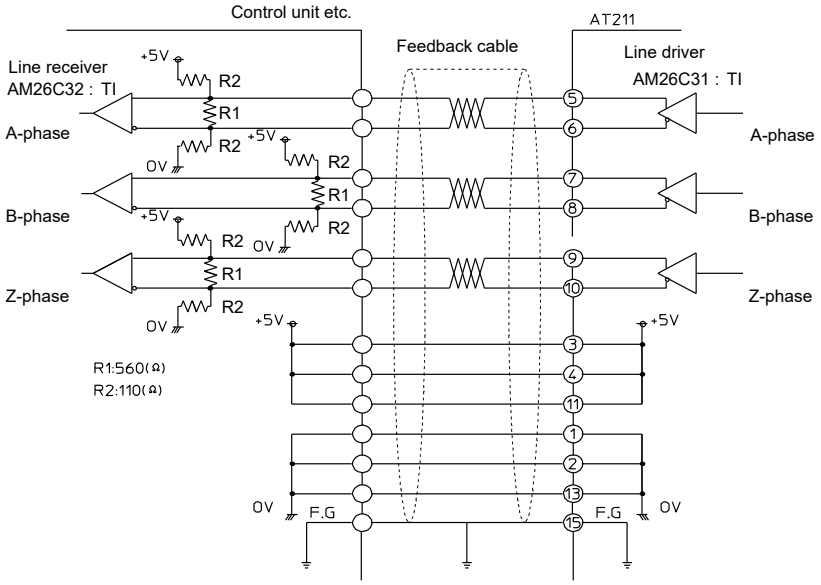

- For power: 0.5 mm^2, three black wires, three red wires
- For signal: 0.18 mm^2, black x red, black x white, red x white (twisted wire)
- If the shield has a drain wire, connect it to the 15th pin.

5 Set the connector on the plug case (supplied accessory).

6 Screw the shielded wire folded back at step 4 with a cable clamp material (supplied accessory).

7 Set the hex nuts (supplied accessory) in the plug case.

8 Insert the hexagonal joint stand (supplied accessory) from the connector and tighten the screws (temporary fixing).

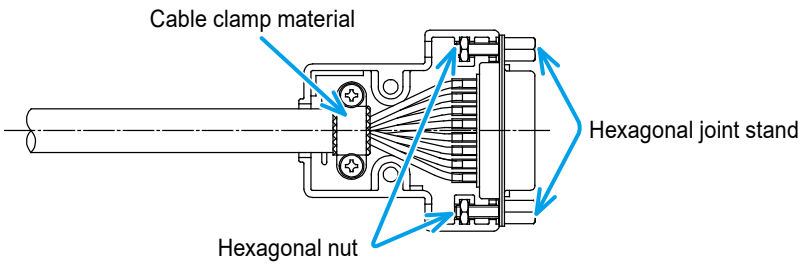

9 Place the other plug case (supplied accessory) and fix it with screws (M2.6 x 14, hex nut/supplied accessory).

10 Tighten the hexagonal joint stand temporarily fixed in step 8.

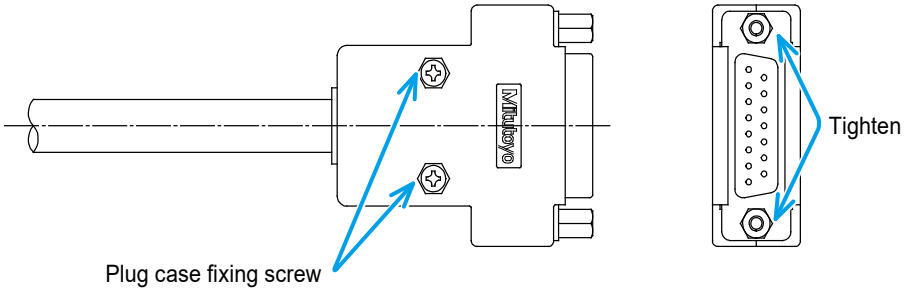

Apply screw locking glue for the screw units.

4.4.3 Calculation of Feedback Cable Length

When making a feedback cable, refer to the following calculation method of maximum cable length.

■ Configuration

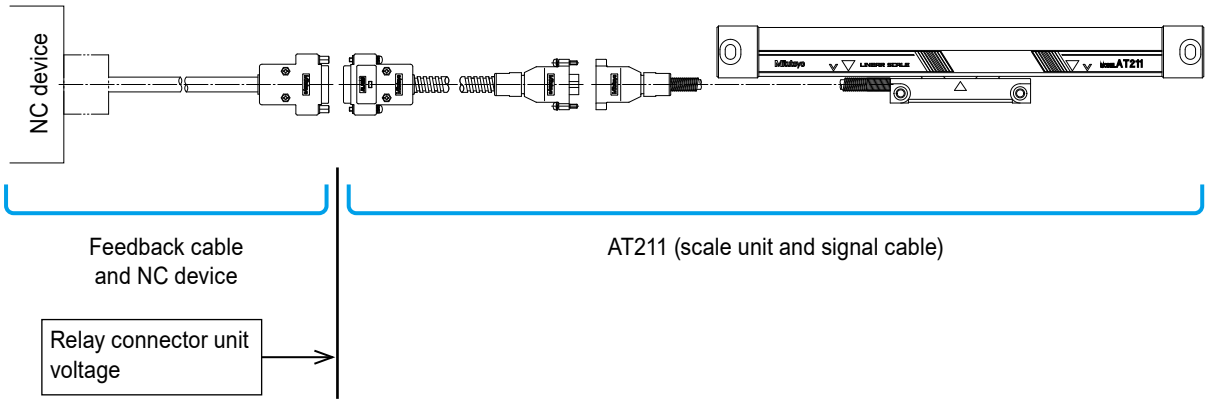

Condition: When the signal cable length is 1 m

Name	Specifications and symbols	Unit
Maximum cable length (detector cable length + signal cable length + feedback cable length)	L	m
Wire resistance of used wire material	a	Ω/m
Number of pairs used for power supply line	b	Wires
Supply voltage (minimum value) from the NC device	4.95 *1	V
Current consumption value	0.2	A
Relay connector unit voltage (minimum value)	4.5 + 0.035 *2, *3	V

*1 It is usually the standard supply voltage of the NC device.

*2 When the detector cable length + signal cable length is 1 m or more, a voltage drop of 0.035 V per 1 m occurs.
Consider the voltage drop in the detector cable + signal cable.

*3 Confirm that the input voltage of the relay connector unit is the minimum value or more in the table above.

Calculation formula

Allowable voltage drop ≥ (Current consumption x wire material resistance x 2 x max cable length) ÷ Number of pairs used for power supply line (1)

Applying the conditions in the above table to formula (1) gives the following result.

(4.95 - (4.5 + 0.035)) [V] ≧ (0.2 [A] x a [Ω/m] x 2 x L [m]) ÷ b [wires] (2)

Modify formula (2) above to the following one.

$$L\ [m] \leqq \frac{b\ (4.95\ -\ 4.535)}{0.4\ a} \qquad (3)$$

Produce the feedback cable of the max cable length (L[m]), wire resistance of used wire material (a[Ω/m]) and number of pairs used for power supply line (b[wires]) satisfying formula (3) above.

4.5 Air Purging

There is a method to improve environmental resistance (coolant resistance, dust resistance) of assembly type linear scale by supplying clean compressed air into the scale main unit. Set up pipe to one of the M5 screw holes on both sides of the scale main unit and supply compressed air.

Tips

- Air purging can be performed for a scale unit that is fixed at multiple points.
- Air supply is an auxiliary method for cleaning inside the scale main unit.
- For air supply, mounting posture is important. Follow the instructions in this manual.
- When supplying air, it is necessary to periodically replace the air filter due to the contamination of the air source. If you continue to use the dirty filter, dirt will enter the scale and cause trouble, so pay attention to this issue.

4.5.1 Input Air Specification

The table below shows the input air specification.

This specification corresponds to ISO8573-1 Class 1.4.1.

Item	Specification
Maximum particle diameter (µm)	0.1
Lowest pressure dew point (°C)	+3
Oil concentration (mg/m^3)	0.01

4.5.2 Air Flow Supplied to the Scale

Supply air of 10 L/min—20 L/min per scale axis.

Air should slightly come out from the closed part of the dust-proof rubber lips.

Adjust the air flow referring to the table below.

Conditions	Air flow rate
Using Mitutoyo's fixed diaphragm (ID: ø0.9)	Make adjustment with the air pressure, so that the air flow becomes 10 L/min—20 L/min (per scale unit). Reference values when supplying air to one axis are as follows. • If air pressure is 0.1 MPa: Approx. 12.7 L/min • If air pressure is 0.2 MPa: Approx. 19 L/min
Using other fixed diaphragms	Make adjustment with the air pressure, so that the air flow becomes 10 L/min—20 L/min (per scale unit). For information on the air flow and pressure relationships, refer to the flow characteristics (ID of the fixed diaphragm and flow-pressure relations) provided by each pneumatic component manufacturer.

Using flow rate adjustable valves	Make adjustment with the air pressure, so that the air flow becomes 10 L/min—20 L/min (per scale unit). **NOTICE** Make sure not to supply a large amount of air before making adjustments. Otherwise, it may cause components to break thereby resulting in malfunctions.

4.5.3 Air Supply Unit

The specifications for recommended air devices and the manufacturer models are described in the following.

If the specifications are the same, you can use air equipment made by another company.

Estimated time of element replacement for each filter is one year.

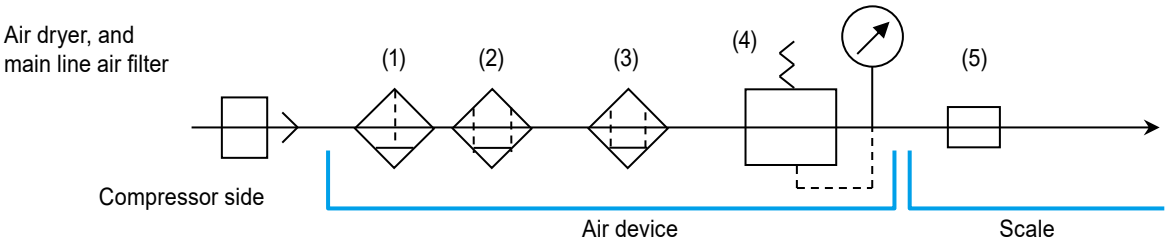

No.	Component	Appearance	Specification	Part No.	
				Part No. (Mitutoyo)	Manufacturer model
(1)	Air filter		• Fluid: Compressed air • Maximum operating pressure: 1.0 MPa • Proof pressure: 1.5 MPa • Maximum particle diameter (filtration): 5 µm • Secondary oil concentration: -	-	F1000-8-W (CKD)
(2)	Oil mist filter		• Fluid: Compressed air • Maximum operating pressure: 1.0 MPa • Proof pressure: 1.5 MPa • Maximum particle diameter (filtration): 0.01 µm • Secondary oil concentration: 0.01 mg/m^3 or below • Element replacement: One year (6000 hours) or when pressure is lowered to 0.1 MPa or lower	-	M1000-8-W (CKD)

(3)	High performance oil mist filter		• Fluid: Compressed air • Maximum operating pressure: 1.0 MPa • Proof pressure: 1.5 MPa • Maximum particle diameter (filtration): 0.01 μm • Secondary oil concentration: 0.001 mg/m³ or below • Element replacement: One year (6000 hours) or when pressure is lowered to 0.1 MPa or lower	-	MX1000-8-W (CKD)
(4)	Regulator		• Fluid: Compressed air • Maximum operating pressure: 1.0 MPa • Proof pressure: 1.5 MPa • Set pressure range: 0.1 MPa—0.7 MPa • Oil proof treatment type	-	RA-050-L (CKD)
(5)	Fixed diaphragm		• Fluid: Air • Used pressure range: 0.1 MPa—0.9 MPa • Screw tightening torque: 1.0 N·m—1.5 N·m • Flow rate at pressure 0.1 MPa: Approx. 12.7 L/min (per axis) • Flow rate at pressure 0.2 MPa: Approx. 19 L/min (per axis)	06ACJ155	PC6-M5M-0.9 (Pisco custom order)
(1) to (4)	Air unit	See the next figure.	Equivalent to ISO-8573-1 Class 1.4.1 • Maximum particle diameter (filtration): 0.01 μm • Lowest pressure dew point: - • Oil concentration (oil mist concentration): 0.001 mg/m³ or less • Flow rate at pressure 0.1 MPa: 12.7 L/min (per axis) • Insertable flow rate (maximum): 75 L/min • When to replace each element: One year	06ACJ154	-

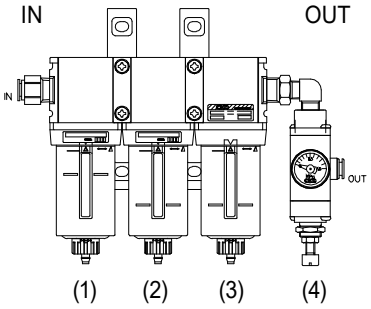

(1) Air filter
(2) Oil mist filter
(3) High performance oil mist filter
(4) Regulator

Appearance of air unit

4.5.4 Connection Method

Do not directly supply air from the compressor to the air unit. Make sure to use dry compressed air through the air dryer or main line air filter.

Attach the fixed diaphragm to the scale side.

■ When supplying air to two linear scales (two axes)

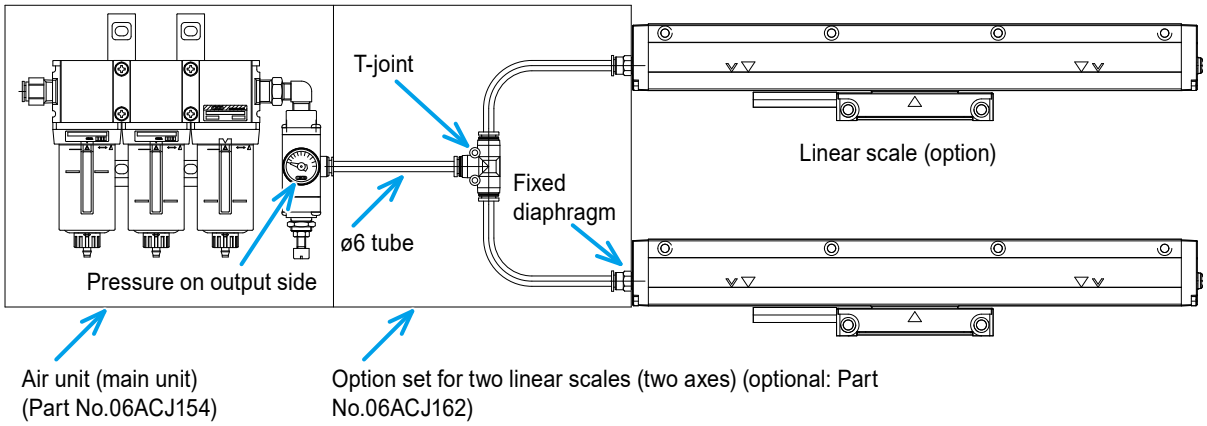

■ When supplying air to three linear scales (three axes)

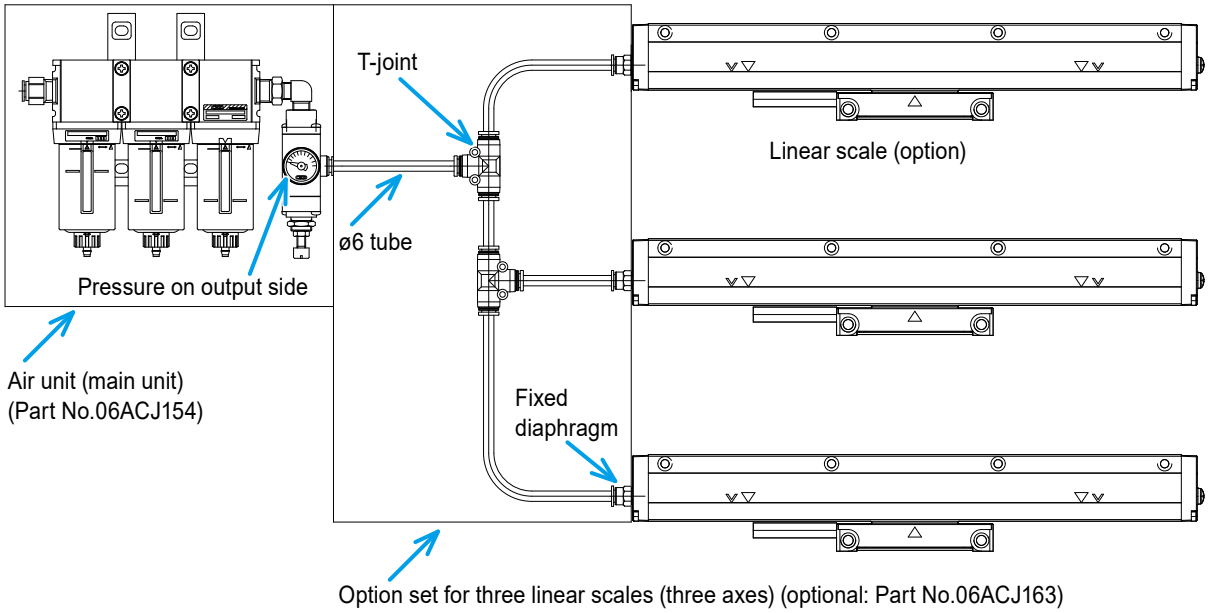

Tips

- For each air unit, air can be supplied up to five axes.
- You can connect up to four to five axes by combining option sets for two axes (No.06ACJ162) and three axes (No.06ACJ163).
  A ø6 air tube (length: 20 m) is included in each option set.
- For information on maintenance, refer to the manual supplied with the unit.

4.6 External View and Dimensional Drawings of the Scale Main Unit

4.6.1 Fixing at Multiple Points

■ Dimensional drawings

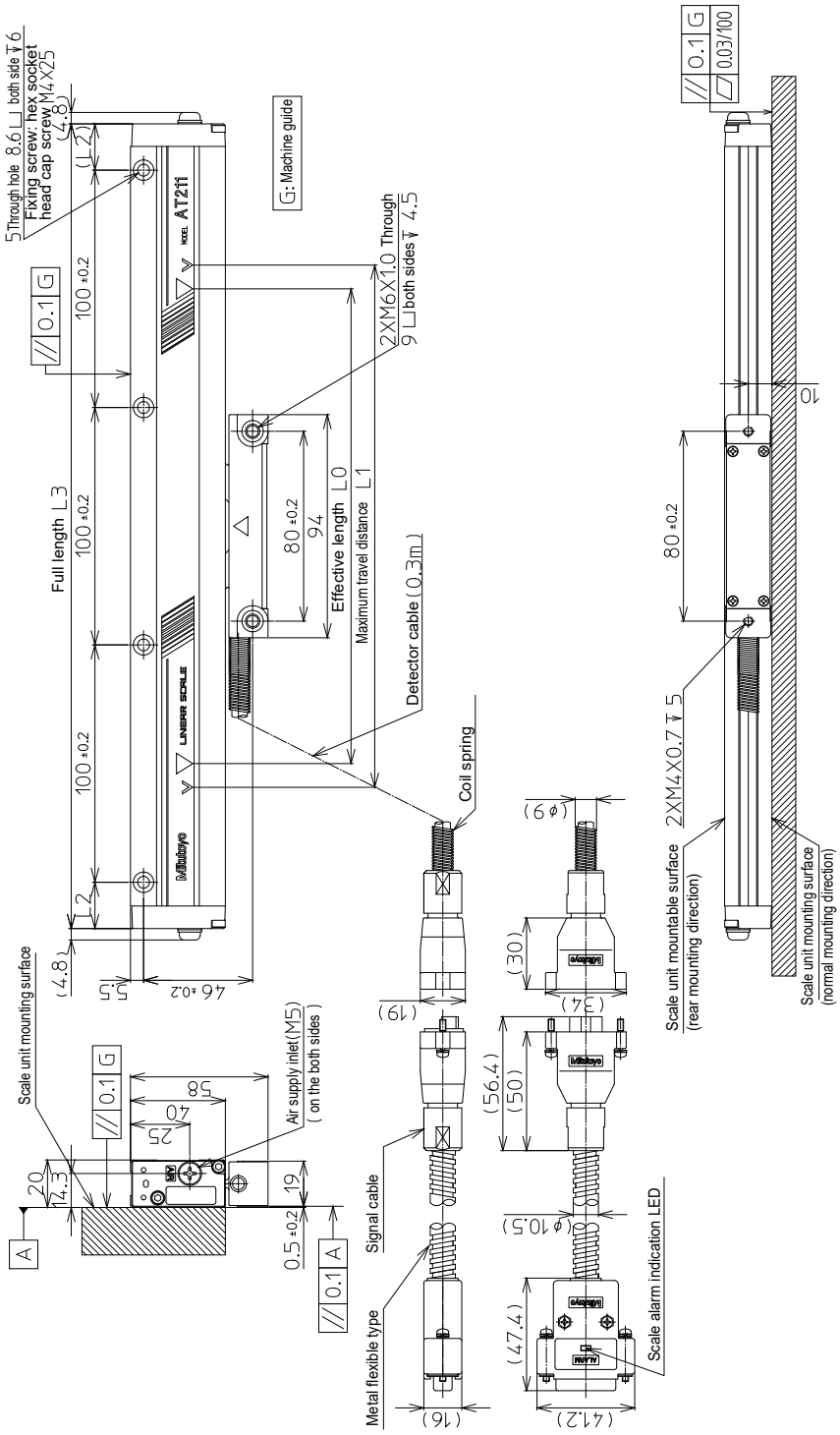

■ Dimensional drawings table

Unit: mm

Code No.	Model number	Effective length L_0	Maximum travel distance L_1	End face size L_2	Full length L_3	Scale unit Number of fixing holes
539-701A	AT211-100A	100	120	19.5	239	3
539-702A	AT211-150A	150	170	44.5	289	3
539-703A	AT211-200A	200	220	19.5	339	4
539-704A	AT211-250A	250	270	44.5	389	4
539-705A	AT211-300A	300	330	24.5	449	5
539-706A	AT211-350A	350	380	49.5	499	5
539-707A	AT211-400A	400	430	24.5	549	6
539-708A	AT211-450A	450	480	49.5	599	6
539-709A	AT211-500A	500	540	29.5	659	7
539-711A	AT211-600A	600	640	29.5	759	8
539-713A	AT211-700A	700	740	29.5	859	9
539-714A	AT211-750A	750	780	49.5	899	9
539-715A	AT211-800A	800	840	29.5	959	10
539-716A	AT211-900A	900	940	29.5	1059	11
539-717A	AT211-1000A	1000	1040	29.5	1159	12
539-718A	AT211-1100A	1100	1140	29.5	1259	13
539 719A	AT211-1200A	1200	1240	29.5	1359	14
539-720A	AT211-1300A	1300	1340	29.5	1459	15
539-721A	AT211-1400A	1400	1440	29.5	1559	16
539-722A	AT211-1500A	1500	1540	29.5	1659	17

4.6.2 Fixing at Both Ends

■ Dimensional drawings

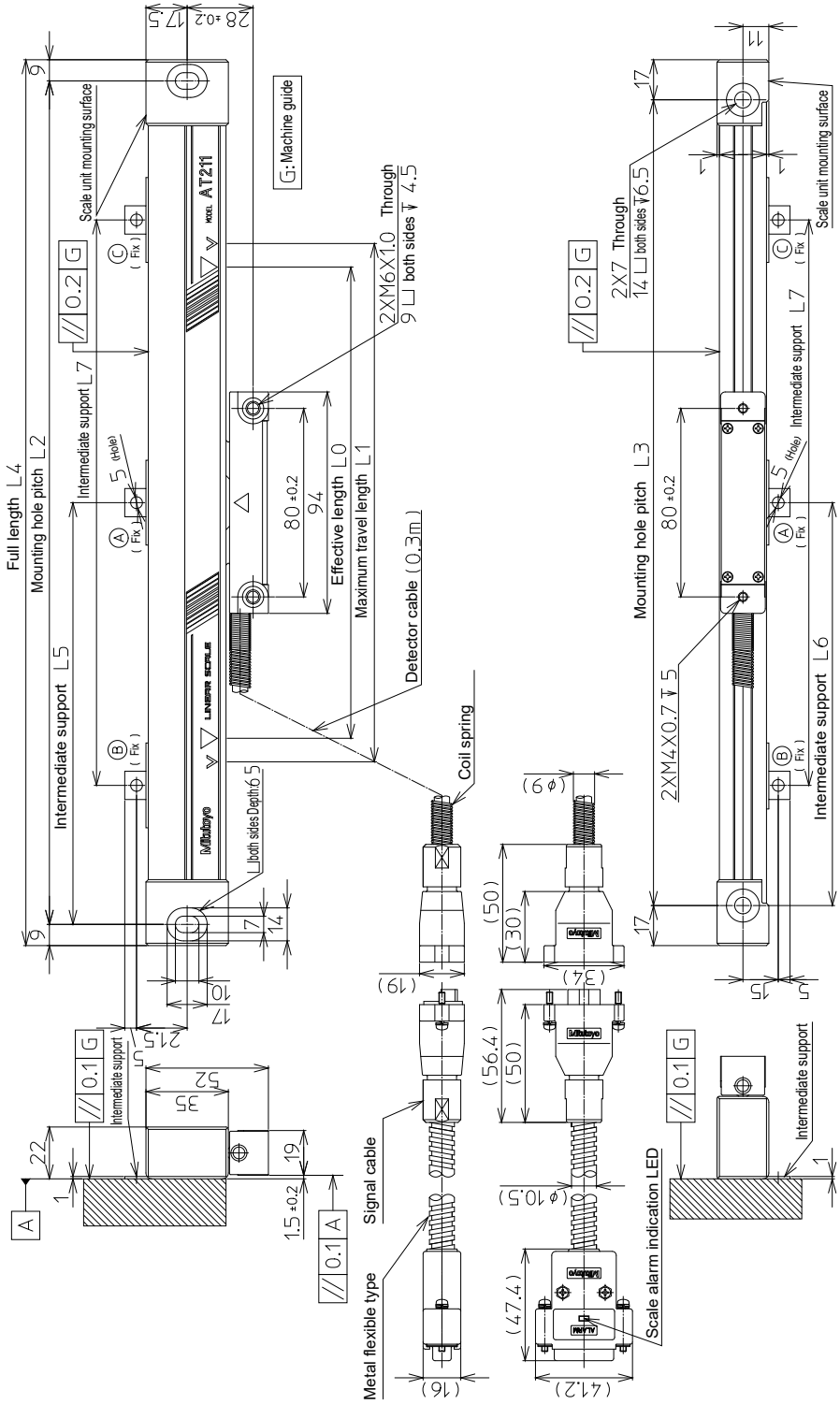

■ Dimensional drawings table

Unit: mm

Code No.	Model No.	Effective length L_0	Maximum travel distance L_1	Mounting hole pitch		Full length L_4	Intermediate support		
				L_2	L_3		L_5	L_6	L_7
539-701B	AT211-100B	100	120	258	242	276	-	-	-
539-702B	AT211-150B	150	170	308	292	326			
539-703B	AT211-200B	200	220	358	342	376			
539-704B	AT211-250B	250	270	408	392	426			
539-705B	AT211-300B	300	330	468	452	486			
539-706B	AT211-350B	350	380	518	502	536			
539-707B	AT211-400B	400	430	568	552	586			
539-708B	AT211-450B	450	480	618	602	636			
539-709B	AT211-500B	500	540	678	662	696	339	331	
539-711B	AT211-600B	600	640	778	762	796	389	381	
539-713B	AT211-700B	700	740	878	862	896	439	431	
539-714B	AT211-750B	750	780	918	902	936	459	451	
539-715B	AT211-800B	800	840	978	962	996	489	481	
539-716B	AT211-900B	900	940	1078	1062	1096	539	531	
539-717B	AT211-1000B	1000	1040	1178	1162	1196	589	581	
539-718B	AT211-1100B	1100	1140	1278	1262	1296	-	-	430
539-719B	AT211-1200B	1200	1240	1378	1362	1396			460
539-720B	AT211-1300B	1300	1340	1478	1462	1496			490
539-721B	AT211-1400B	1400	1440	1578	1562	1596			530
539-722B	AT211-1500B	1500	1540	1678	1662	1696			560

Tips

The number of intermediate supports to be supplied varies depending on the effective length.

Effective length (mm)	Intermediate support
500 to 1000	A (one location)
1100 to 1500	B, C (two locations)

MEMO

5 Troubleshooting

This chapter describes how to check for the reasons why problems occur when initially powering on, or for when alarms are generated during operation.

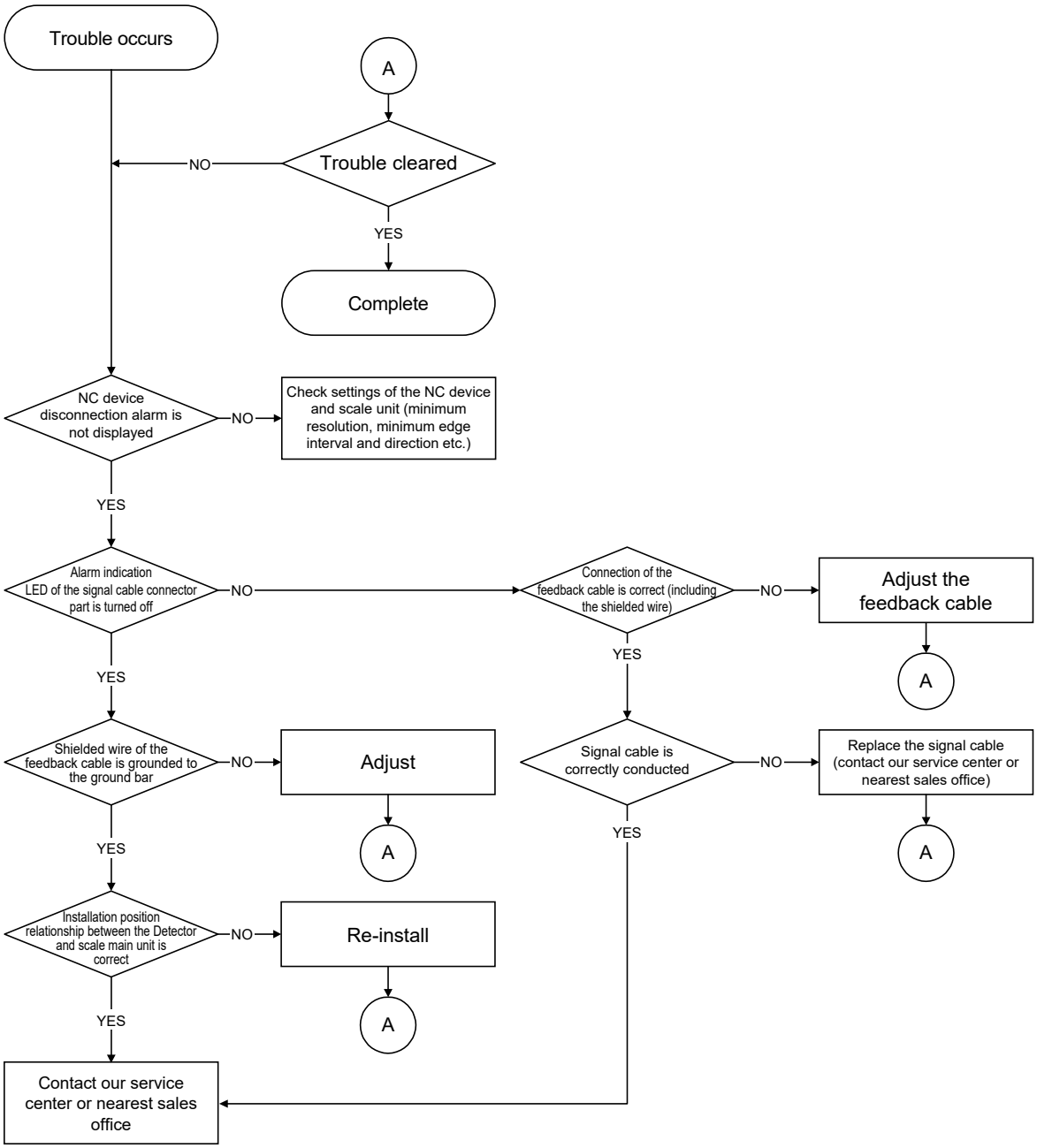

MEMO

6 Appendix

6.1 Quantity of the Supplied Accessories for Installation

6.1.1 Fixing at multiple points

Effective length	Part No.	Accessory							
		Hex socket head cap screw M4 x 10	Hex socket head cap screw M4 x 25	Plain washer, nominal 4 Small round	Spring washer, nominal 4	Nylon clip HP-4N	Nylon clip HP-6N	Nylon clip HP-10N	Spacer set Thickness = 0.3, 0.4, 0.5, 0.6 mm
100 to 600	06AFU826A	7	10	10	10	5	5	2	1 for each
700 to 1500	06AFU826B		19	19	19				

6.1.2 Fixing at both ends

Effective length	Part No.	Accessory						
		Hex socket head cap screw M4 x 10	Hex socket head cap screw M4 x 25	Hex socket head cap screw M6 x 25	Plain washer, nominal 4 Small round	Plain washer, nominal 6 Small round	Spring washer, nominal 4	Spring washer, nominal 6
100 to 450	06AFU825A	7	2	2	2	2	2	2
500 to 1000	06AFU825B							
1100 to 1500	06AFU825C							

Effective length	Part No.	Accessory						
		Nylon clip HP-4N	Nylon clip HP-6N	Nylon clip HP-10N	Intermediate support	Countersunk screw M3 x 5	Hex socket head cap screw M4 x 8	Spacer set Thickness = 0.3, 0.4, 0.5, 0.6 mm
100 to 450	06AFU825A	5	5	2	0	0	0	1 for each
500 to 1000	06AFU825B				1	2	1	
1100 to 1500	06AFU825C				2	4	2	

SERVICE NETWORK

*As of October 2020

Europe

Mitutoyo Europe GmbH
Borsigstrasse 8-10, 41469 Neuss, GERMANY
TEL: 49 (0)2137 102-0 FAX: 49 (0)2137 102-351

Mitutoyo CTL Germany GmbH
Von-Gunzert-Strasse 17, 78727 Oberndorf, GERMANY
TEL: 49 (0)7423 8776-0 FAX: 49 (0)7423 8776-99

KOMEG Industrielle Messtechnik GmbH
Zum Wasserwerk 3, 66333 Völklingen, GERMANY
TEL: 49 (0)6898 91110 FAX: 49 (0)6898 9111100

Germany

Mitutoyo Deutschland GmbH
Borsigstrasse 8-10, 41469 Neuss, GERMANY
TEL: 49 (0)2137 102-0 FAX: 49 (0)2137 86 85

M³ Solution Center Hamburg
Tempowerkring 9·im HIT-Technologiepark 21079 Hamburg, GERMANY
TEL: 49 (0)40 791894-0 FAX: 49 (0)40 791894-50

M³ Solution Center Berlin
Ernst-Lau-Straße 6, 12489 Berlin, GERMANY
TEL:49(0)30 2611 267 FAX: 49 30 67988729

M³ Solution Center Eisenach
Neue Wiese 4, 99817 Eisenach,GERMANY
TEL: 49 (0)3691 88909-0 FAX: 49 (0)3691 88909-9

M³ Solution Center Ingolstadt
Marie-Curie-Strasse 1A, 85055 Ingolstadt, GERMANY
TEL: 49 (0)841 954920 FAX: 49 (0)841 9549250

M³ Solution Center Leonberg
Steinbeisstrasse 2, 71229 Leonberg, GERMANY
TEL: 49 (0)7152 6080-0 FAX: 49 (0)7152 608060

Mitutoyo-Messgeräte Leonberg GmbH
Heidenheimer Strasse 14, 71229 Leonberg, GERMANY
TEL: 49 (0)7152 9237-0 FAX: 49 (0)7152 9237-29

U.K.

Mitutoyo (UK) Ltd.
Joule Road, West Point Business Park,
Andover, Hampshire SP10 3UX, UNITED KINGDOM
TEL: 44 (0)1264 353 123 FAX: 44 (0)1264 354883

M³ Solution Center Coventry
Unit6, Banner Park, Wickmans Drive, Coventry, Warwickshire CV4 9XA, UNITED KINGDOM
TEL: 44 (0)2476 426300 FAX: 44 (0)2476 426339

M³ Solution Center Halifax
Lowfields Business Park, Navigation Close, Elland, West Yorkshire HX5 9HB, UNITED KINGDOM
TEL: 44 (0)1422 375566 FAX: 44 (0)1422 328025

M³ Solution Center East Kilbride
The Baird Building, Rankine Avenue, Scottish Enterprise Technology Park, East Killbride G75 0QF, UNITED KINGDOM
TEL: 44 (0)1355 581170 FAX: 44 (0)1355 581171

France

Mitutoyo France
Paris Nord 2-123 rue de la Belle Etoile, BP 59267 ROISSY EN FRANCE 95957 ROISSY CDG CEDEX, FRANCE
TEL: 33 (0)149 38 35 00

M³ Solution Center LYON
Parc Mail 523, cours du 3ème millénaire, 69791 Saint-Priest, FRANCE
TEL: 33 (0)149 38 35 70

M³ Solution Center STRASBOURG
Parc de la porte Sud, Rue du pont du péage, 67118 Geispolsheim, FRANCE
TEL: 33 (0)149 38 35 80

M³ Solution Center CLUSES
Espace Scionzier 480 Avenue des Lacs, 74950 Scionzier, FRANCE
TEL: 33 (0)1 49 38 35 90

M³ Solution Center TOULOUSE
Aeroparc Saint Martin Cellule B08 ZAC de Saint Martin du Touch 12 rue de Caulet 31300 Toulouse, FRANCE
TEL: 33 (0)1 49 38 42 90

M³ Solution Center RENNES
2, rue Claude Chappe, PA le Vallon - ZAC Mivoie, 35230 Noyal-Châtillon-sur-Seiche, FRANCE
TEL: 33 (0)1 49 38 42 10

Italy

MITUTOYO ITALIANA S.r.l.
Corso Europa, 7 - 20045 Lainate (MI), ITALY
TEL: 39 02 935781 FAX: 39 02 93578255

M³ Solution Center BOLOGNA
Via dei Carpini1/A - 40011 Anzola Emilia (BO), ITALY
TEL: 39 02 93578215 FAX: 39 02 93578255

M³ Solution Center CHIETI
Contrada Santa Calcagna - 66020 Rocca S. Giovanni (CH), ITALY
TEL: 39 02 93578280 FAX: 39 02 93578255

M³ Solution Center PADOVA
Via G. Galilei 21/F - 35035 Mestrino (PD), ITALY
TEL: 39 02 93578268 FAX: 39 02 93578255

Netherlands

Mitutoyo Nederland B.V.
Wiltonstraat 25, 3905 KW Veenendaal, THE NETHERLANDS
TEL: 31(0)318-534911

Mitutoyo Nederland B.V. / M³ Solution Center Enschede
Institutenweg 50, 7521 PK Enschede, THE NETHERLANDS
TEL: 31(0)318-534911

Mitutoyo Nederland B.V. / M³ Solution Center Eindhoven
De Run 1115, 5503 LB Veldhoven, THE NETHERLANDS
TEL: 31(0)318-534911

Mitutoyo Research Center Europe B.V.
De Rijn 18, 5684 PJ Best, THE NETHERLANDS
TEL:31(0)499-320200 FAX:31(0)499-320299

Belgium

Mitutoyo Belgium N.V. / M³ Solution Center Melsele
Schaarbeekstraat 20, B-9120 Melsele, BELGIUM
TEL: 32 (0)3-2540444

Sweden

Mitutoyo Scandinavia AB
Släntvägen 6, 194 61 Upplands Väsby, SWEDEN
TEL: 46 (0)8 594 109 50 FAX: 46 (0)8 590 924 10

M³ Solution Center Alingsås
Ängsvaktaregatan 3A, 441 38 Alingsås, SWEDEN
TEL: 46 (0)8 594 109 50 FAX:46 (0)322 63 31 62

M³ Solution Center Värnamo
Storgatsbacken 1, 331 30 Värnamo, SWEDEN
TEL: 46 (0)8 594 109 50 FAX: 46 (0)370 463 34

Switzerland

Mitutoyo (Schweiz) AG
Steinackerstrasse 35, 8902 Urdorf, SWITZERLAND
TEL: 41 (0)447361150 FAX: 41(0)447361151

Mitutoyo (Suisse) SA
Rue Galilée 4, 1400 Yverdon-les Bains, SWITZERLAND
TEL: 41 (0)244259422 FAX: 41 (0)447361151

Poland

Mitutoyo Polska Sp.z o.o.
Ul.Graniczna 8A, 54-610 Wroclaw, POLAND
TEL: 48 (0)71354 83 50 FAX: 48 (0)71354 83 55

Czech Republic

Mitutoyo Česko s.r.o.
Dubská 1626, 415 01 Teplice, CZECH REPUBLIC
TEL: 420 417-514-011 FAX: 420 417-579-867

Mitutoyo Česko s.r.o. M³ Solution Center Ivančice
Ke Karlovu 62/10, 664 91 Ivančice, CZECH REPUBLIC
TEL: 420 417-514-011 FAX: 420 417-579-867

Mitutoyo Česko s.r.o. M³ Solution Center Ostrava Mošnov
Mošnov 314, 742 51 Mošnov, CZECH REPUBLIC
TEL: 420 417-514-050 FAX:420 417-579-867

Mitutoyo Česko s.r.o. Slovakia Branch
Hviezdoslavova 124, 017 01 Považská Bystrica, SLOVAKIA
TEL: 421 948-595-590

Hungary

Mitutoyo Hungária Kft.
Záhony utca 7, D-épület / fsz, 1031 Budapest, HUNGARY
TEL: 36 (0)1 2141447 FAX: 36 (0)1 2141448

Romania

Mitutoyo Romania SRL
1A Drumul Garii Odai Street, showroom, Ground Floor, 075100 OTOPENI-ILFOV, ROMANIA
TEL: 40 (0)311012088 FAX: +40 (0)311012089

Showroom in Brasov
Strada Ionescu Crum Nr.1, Brasov Business Park Turnul 1, Mezanin, 500446 Brasov-Judetul Brasov, ROMANIA
TEL/FAX: 40 (0)371020017

Russian Federation

Mitutoyo RUS LLC

13 Sharikopodshipnikovskaya, bld.2,
115088 Moscow, RUSSIAN FEDERATION

TEL: 7 495 7450 752

Finland

Mitutoyo Scandinavia AB Finnish Branch

Viherkiitäjä 2A, 33960, Pirkkala, FINLAND

TEL: 358 (0)40 355 8498

Austria

Mitutoyo Austria GmbH

Salzburger Straße 260 / 3 A-4600 Wels, AUSTRIA

TEL: 43 (0)7242 219 998

Mitutoyo Austria GmbH Goetzis Regional showroom

Lastenstrasse 48a 6840 Götzis AUSTRIA

Singapore

Mitutoyo Asia Pacific Pte. Ltd.

Head office / M³ Solution Center

24 Kallang Avenue, Mitutoyo Building,
SINGAPORE 339415

TEL:(65)62942211 FAX:(65)62996666

Malaysia

Mitutoyo (Malaysia) Sdn. Bhd.

Kuala Lumpur Head Office / M³ Solution Center

Mah Sing Integrated Industrial Park, 4, Jalan Utarid U5/14,
Section U5, 40150 Shah Alam, Selangor, MALAYSIA

TEL:(60)3-78459318 FAX:(60)3-78459346

Penang Branch office / M³ Solution Center

30, Persiaran Mahsuri 1/2, Sunway Tunas, 11900
Bayan Lepas, Penang, MALAYSIA

TEL:(60)4-6411998 FAX:(60)4-6412998

Johor Branch office / M³ Solution Center

70 (Ground Floor), Jalan Molek 1/28, Taman
Molek, 81100 Johor Bahru, Johor, MALAYSIA

TEL:(60)7-3521626 FAX:(60)7-3521628

Thailand

Mitutoyo(Thailand)Co., Ltd.

Bangkok Head Office / M³ Solution Center

76/3-5, Chaengwattana Road, Kwaeng Anusaowaree,
Khet Bangkaen, Bangkok 10220, THAILAND

TEL:(66)2080 3500 FAX:(66)2521 6136

Chonburi Branch / M³ Solution Center

7/1, Moo 3, Tambon Bowin, Amphur Sriracha,
Chonburi 20230, THAILAND

TEL:(66)2080 3563 FAX:(66)3834 5788

ACC Branch / M³ Solution Center

122/8, 122/9, Moo 6, Tambon Donhuaroh, Amphur
Muangchonburi, Chonburi 20000, THAILAND

TEL:(66)2080 3565

Indonesia

PT. Mitutoyo Indonesia

Head Office / M³ Solution Center

Jalan Sriwijaya No.26 Desa cibatu Kec. Cikarang
Selatan Kab. Bekasi 17530, INDONESIA

TEL: (62)21-2962 8600 FAX: (62)21-2962 8604

Vietnam

Mitutoyo Vietnam Co., Ltd

Hanoi Head Office / M³ Solution Center

1st & 2nd floor, MHDI Building, No. 60 Hoang Quoc
Viet Road, Nghia Do Ward, Cau Giay District, Hanoi,
VIETNAM

TEL:(84)24-3768-8963 FAX:(84)24-3768-8960

Ho Chi Minh City Branch Office / M³ Solution Center

123 Dien Bien Phu Street,Ward 15,Binh Thanh
District, Ho Chi Minh City, VIETNAM

TEL:(84)28-3840-3489 FAX:(84)28-3840-3498

Philippines

Mitutoyo Philippines, Inc.

Head Office / M³ Solution Center

Unit 1B & 2B LTI, Administration Building 1, Annex 1, North
Main Avenue, Laguna Technopark, Binan Laguna 4024,
PHILIPPINES

TEL:(63)49 544 0272 FAX:(63)49 544 0272

India

Mitutoyo South Asia Pvt. Ltd. Head Office

C-122, Okhla Industrial Area, Phase-I,
New Delhi-110 020, INDIA

TEL:(91) 11-26372090 FAX: (91) 11-26372636

MSA Technical Center

Plot no. 65, Ground Floor, Udyog Vihar, Phase-4 Gurga-
on, Haryana - 122016, INDIA

TEL : (91) 124–2340286/287

Mumbai Region Head office

303, Sentinel Hiranandani Business Park Powai,
Mumbai-400 076, INDIA

TEL:(91) 22-25700684/837/839 FAX: (91) 22-25700685

Pune Office / M³ Solution Center

G4/G5, Pride Kumar Senate, Off. Senapati Bapat
Road, Pune-411 016, INDIA

TEL:(91) 20-25660043/44/45 FAX: (91) 20-66033644

Bengaluru Region Head office / M³ Solution Center

No. 5, 100 Ft. Road, 17th Main, Koramangala, 4th Block, Bengaluru-560 034, INDIA

TEL:(91) 80-25630946/47/48 FAX: (91) 80-25630949

Chennai Office / M³ Solution Center

No. 624, Anna Salai Teynampet, Chennai-600 018, INDIA

TEL: (91) 44-24328823/24
FAX: (91) 44-24328825

Kolkata Office

Unit No. 1208,Om Tower, 32,J.L..Nehru Road, Kolkata-700 071, INDIA

Tel: 91 33-22267088/40060635 Fax: (91) 33-22266817

Ahmedabad Office/M³ Solution Center (Ahmedabad)

A-104 & A-105, First Floor, Solitaire Corporate Park, Near Divya Bhaskar Press, S.G. Road, Ahmedabad - 380 015, INDIA

TEL: (91) 079 - 29704902/903

Coimbatore Office

Regus, Srivari Srimath, 3rd Floor, Door No:1045, Avinashi Road, Coimbatore - 641 018,INDIA

TEL: (91) 9345005663

Taiwan

Mitutoyo Taiwan Co., Ltd. / M³ Solution Center Taipei

4F., No.71, Zhouzi St., Neihu Dist.,Taipei City 114, TAIWAN (R.O.C.)

TEL:886(2)5573-5900 FAX:886(2)8752-3267

Taichung Branch / M³ Solution Center Taichung

1F., No. 299, Gaotie 1st Rd., Wuri Dist., Taichung City 414, TAIWAN (R.O.C.)

TEL:886(4)2338-6822 FAX:886(4)2338-6722

Kaohsiung Branch / M³ Solution Center Kaohsiung

1F., No.31-1, Haibian Rd., Lingya Dist., Kaohsiung City 802, TAIWAN (R.O.C.)

TEL:886(7)334-6168 FAX:886(7)334-6160

South Korea

Mitutoyo Korea Corporation

Head Office / M³ Solution Center

(Sanbon-Dong, Geumjeong High View Build.), 6F, 153-8, Ls-Ro, Gunpo-Si, Gyeonggi-Do, 15808 KOREA

TEL:82(31)361-4200 FAX:82(31)361-4201

Busan Office / M³ Solution Center

(3150-3, Daejeo 2-dong) 8,Yutongdanji 1-ro 49beon-gil, Gangseo-gu, Busan, 46721 KOREA

TEL:82(51)324-0103 FAX:82(51)324-0104

Daegu Office / M³ Solution Center

(Galsan-dong, Daegu Business Center), 301-Ho, 217, Seongseogongdan-ro, Dalseo-gu, Daegu 42704 KOREA

TEL:82(53)593-5602 FAX:82(53)593-5603

China

Mitutoyo Measuring Instruments (Shanghai) Co., Ltd.

8th Floor, Tower 1 Lujiazui Jinkong Square No.1788/1800 Century Ave., Pudong New District, Shanghai 200122, CHINA

TEL:86(21)5836-0718 FAX:86(21)5836-0717

Suzhou Office / M³ Solution Center (Suzhou)

No. 46 Baiyu Road, Suzhou 215021, CHINA

TEL:86(512)6522-1790 FAX:86(512)6251-3420

Wuhan Office / M³ Solution Corner

Room 1701, Wuhan Wanda Center, No. 96, Linjiang Road, Wuchang District, Wuhan Hubei 430060, CHINA

TEL:86(27)8544-8631 FAX:86(27)8544-6227

Chengdu Office

1-701, New Angle Plaza, 668# Jindong Road, Jinjiang District, Chengdu, Sichuan 610066,CHINA

TEL:86(28)8671-8936 FAX:86(28)8671-9086

Hangzhou Office

Room 804, Eastern International Business Center Building 1, No.600 Jinsha Road of

Hangzhou Economic and Technological Development Zone, 310018, CHINA

TEL: 86(571)8288-0319 FAX: 86(571)8288-0320

Tianjin Office / M³ Solution Center China (Tianjin)

Room D 12/F, TEDA Building, No.256 Jie-fang Nan Road Hexi District,Tianjin 300042, CHINA

TEL:86(22)5888-1700 FAX:86(22)5888-1701

Changchun Office

Room 815, 8F, Building A1, Upper East International No.3000 Dongsheng Street, Erdao District, Changchun, Jilin, 130031, CHINA

TEL:86(431)8192-6998 FAX:86(431)8192-6998

Chongqing Office

Room 1312, Building 3, Zhongyu Plaza, No.86, Hongjin Avenue,Longxi Street, Yubei District, Chongqing, 400000, CHINA

TEL:86(23)6595-9950 FAX:86(23)6595-9950

Qingdao Office

Room 638, 6F, No.192 Zhengyang Road, Chengyang District, Qingdao, Shandong, 266109, CHINA

TEL:86(532)8096-1936 FAX:86(532)8096-1937

Xi'an Office

Room 805, Xi'an International Trade Center, No. 196 Xiaozhai East Road, Xi'an, 710061, CHINA

TEL:86(29)8538-1380 FAX:86(29)8538-1381

Dalian Office / M³ Solution Center China (Dalian)

Room A-106 Shuijing SOHO, No.16 Harbin Road,Economic Development Zone,Dalian, 116600 CHINA

TEL:86(411)8718 1212 FAX:86(411)8754-7587

Zhengzhou Office

Room1801,18/F,Unit1,Building No.23, Shangwu Inner Ring Road, Zhengdong New District,Zhengzhou City, Henan 450018, CHINA

TEL:86(371)6097-6436 FAX:86(371)6097-6981

Dongguan Office / M³ Solution Center China (Dongguan)

No.26, Chang'an Section Guanchang Road, Chang'an Town, Dongguan City, Guangdong 523855, CHINA

TEL:86(769)8541 7715 FAX:86(769)-8541 7745

Fuzhou Office

Room 2104, City Commercial Centre, No.129 Wu Yi Road N., Fuzhou City, Fujian 350005, CHINA

TEL 86 (591) 8761 8095
FAX 86 (591) 8761 8096

Changsha Office

Room 2207, Building 1, Shiner International Plaza, No. 88, Kaiyuan Middle Road, Changsha City, Hunan 410100, CHINA

TEL 86 (731) 8401 9276
FAX 86 (731) 8401 9376

Mitutoyo Leeport Metrology (Hong Kong) Limited

Room 818, 8/F, Vanta Industrial Centre, No.21-33, Tai Lin Pai Road, Kwai Chung, NT, HONG KONG

TEL:(852)2992-2088 FAX:(852)2670-2488

Mitutoyo Measuring Instruments (Suzhou) Co., Ltd.

No. 46 Baiyu Road, Suzhou 215021, CHINA

TEL:86(512)6252-2660 FAX:86(512)6252-2580

U.S.A.

Mitutoyo America Corporation

965 Corporate Blvd., Aurora, IL 60502, U.S.A.

TEL:1-(630)820-9666 Toll Free No. 1-888-648-8869

FAX:1-(630)978-3501

M³ Solution Center-Illinois

965 Corporate Blvd., Aurora, IL 60502, U.S.A.

M³ Solution Center-Ohio

6220 Hi-Tek Ct., Mason, OH 45040, U.S.A.

TEL:1-(888)-648-8869 FAX:1-(513)754-0718

M³ Solution Center-Michigan

46850 Magellan Drive, Suite 100 Novi, MI 48377, U.S.A.

TEL:1-(888)-648-8869 FAX: 1-(248)-926-0928

M³ Solution Center-California

16925 E. Gale Ave., City of Industry, CA 91745, U.S.A.

TEL:1-(888)-648-8869 FAX:1-(626)369-3352

M³ Solution Center-North Carolina

11515 Vanstory Dr., Suite 140, Huntersville, NC 28078, U.S.A.

TEL:1-(888)-648-8869 FAX:1-(704)875-9273

M³ Solution Center-Alabama

2100 Riverchase Center Suite 106, Birmingharm, AL 35244, U.S.A

TEL:1-(888)-648-8869 FAX:1-(205)-988-3423

M³ Solution Center-Washington

1000 SW 34th St. Suite G, Renton, WA 98057 U.S.A.

TEL:1-(888)-648-8869

M³ Solution Center-Texas

4560 Kendrick Plaza Drive Suite 120 Houston, TX 77032, U.S.A.

TEL:1-(888)-648-8869 FAX:1-(281)227-0937

M³ Solution Center-Massachusetts

753 Forest Street, Suite 110, Marlborough, MA 01752, U.S.A.

TEL:1-(888)648-8869 FAX:1-(508)485-0782

Mitutoyo America Corporation Calibration Lab

965 Corporate Blvd., Aurora, IL 60502, U.S.A.

TEL:1-(888)-648-8869 FAX:1-(630)978-6477

Micro Encoder, Inc.

11533 NE 118th St., Kirkland, WA 98034-7111, U.S.A.

TEL:1-(425)821-3906 FAX:1-(425)821-3228

Micro Encoder Los Angeles, Inc.

16925 Gale Ave. City of Industry, CA 91745-1806 U.S.A.

TEL: 1-626-961-9661 FAX:1-626-333-8019

Mituotyo America Corporation CT-Lab Chicago

965 Corporate Blvd., Aurora, IL 60502, U.S.A.

TEL: 1-(888)-648-8869 FAX: 1-(630)-820-3418

Canada

Mitutoyo Canada Inc.

2121 Meadowvale Blvd., Mississauga,
Ont. L5N 5N1., CANADA

TEL:1-(905)821-1261 FAX:1-(905)821-4968

Montreal Office

7075 Place Robert-Joncas Suite 129, Montreal,
Quebec H4M 2Z2, CANADA

TEL:1-(514)337-5994 FAX:1-(514)337-4498

Brazil

Mitutoyo Sul Americana Ltda.

Head office / M³ Solution Center / Factory

Rodovia Índio Tibiriçá 1555, CEP 08655-000 -
Vila Sol Nascente - Suzano - SP - BRASIL

TEL:55 (11)5643-0040

Argentina

Mitutoyo Sul Americana Ltda.

Argentina Branch / M³ Solution Center

Av. B. Mitre 891/899 – C.P. (B1603CQI)
Vicente López –Pcia. Buenos Aires – ARGENTINA

TEL:54(11)4730-1433 FAX:54(11)4730-1411

Sucursal Cordoba / M³ Solution Center

Av. Amadeo Sabattini, 1296, esq. Madrid Bº
Crisol Sur – CP 5000, Cordoba, ARGENTINA

TEL/FAX:54 (351) 456-6251

Mexico

Mitutoyo Mexicana, S.A. de C.V.

Industria Elēctrica No.15, Parque Industrial, Naucalpan de Juārez, Estado de Mēxico C.P.53370,
MÉXICO

TEL: 52 (01-55) 5312-5612
FAX: 52 (01-55) 5312-3380

Monterrey Office / M³ Solution Center

Blv. Interamericana No. 103, Parque Industrial
FINSA, C.P. 66636 Apodaca, N.L., MÉXICO

TEL: 52(01-81) 8398-8227/8228/8242/8244

FAX: 52(01-81) 8398-8226

Tijuana Office / M³ Solution Center

Calle José María Velazco 10501-C, Col. Cd. Industrial
Nueva Tijuana, C.P. 22500 Tijuana, B.C., MÉXICO

TEL: 52 (01-664) 647-5024

Querétaro Office / M³ Solution Center

Av. Cerro Blanco No.500-1, Colonia Centro Sur,
Querétaro, Querétaro, C.P. 76090, MÉXICO

TEL: 52 (01-442) 340-8018, 340-8019 and 340-8020
FAX: 52 (01-442) 340-8017

Mitutoyo Mexicana, S.A. de C.V. Querétaro Calibration Laboratory

Av. Cerro Blanco 500 30 Centro Sur,
Querétaro, Querétaro, C.P. 76090, MÉXICO

TEL: 52 (01-442) 340-8018, 340-8019 and 340-8020
FAX: 52 (01-442) 340-8017

Aguascalientes Office / M³ Solution Center

Av. Aguascalientes No. 622, Local 15 Centro Comercial El Cilindro Fracc. Pulgas Pandas Norte, C.P.
20138, Aguascalientes, Ags. MÉXICO

TEL: 52 (01-449) 174-4140 and 174-4143

Irapuato Office / M³ Solution Center

Boulevard a Villas de Irapuato No. 1460 L.1 Col. Ejido

Irapuato C.P. 36643

Irapuato, Gto., MÉXICO

TEL: 52 (01-462) 144-1200 and 144-1400

Revision Record

Date of publication	Revision status	Details of revision
January 1, 2019	Sixth edition	Completely revised and issued
January 1, 2021	Seventh edition	Revision due to changes of the harmonized European standards, etc.

Mitutoyo Corporation

20-1, Sakado 1-Chome, Takatsu-ku, Kawasaki-shi, Kanagawa 213-8533, Japan
Tel: +81 (0)44 813-8230 Fax: +81 (0)44 813-8231
Home page: http://www.mitutoyo.co.jp/global.html

For the EU Directive, Authorized representative and importer in the EU:
Mitutoyo Europe GmbH
Borsigstrasse 8-10, 41469 Neuss, Germany

Printed in Japan

No. 99MBE011A